# Product data sheet

Specifications



## analog output module X80 - 8 outputs

BMXAMO0802

## Main

| | |
|---|---|
| **Range of product** | Modicon X80 |
| **Product or component type** | Analog output module |
| **Electrical connection** | 20 ways 1 connector |
| **Isolation between channels** | Non isolated |

## Complementary

| | |
|---|---|
| **Analogue input resolution** | 16 bits |
| **Measurement error** | <= 0.25 % of full scale 0...60 °C<br>0.1 % of full scale 25 °C |
| **Temperature drift** | 45 ppm/°C 0...20 mA<br>45 ppm/°C 4...20 mA |
| **Minimum crosstalk attenuation** | 80 dB |
| **Common mode rejection** | 80 dB |
| **Isolation voltage** | 1400 V DC between channels and ground<br>1400 V DC between channels and bus |
| **Detection type** | Open circuit 4...20 mA<br>Short circuit 0...20 mA |
| **Load impedance ohmic** | <= 350 Ohm 0...20 mA<br><= 350 Ohm 4...20 mA |
| **Output level** | High level |
| **Analogue output number** | 8 |
| **Analogue output type** | Current: 0...20 mA<br>Current: 4...20 mA |
| **Analogue output resolution** | 16 bits |
| **Supply** | Internal power supply via rack |
| **Conversion time** | <= 4 ms |
| **Maximum conversion value** | 0...21 mA 0...20 mA<br>0...21 mA 4...20 mA |
| **Fallback mode** | Configurable<br>Predefined |
| **Operating altitude** | 0...2000 m<br>2000...5000 m with derating factor |
| **Status LED** | 1 LED (green)RUN<br>1 LED per channel (green)channel diagnostic<br>1 LED (red)ERR<br>1 LED (red)I/O |

Disclaimer: This documentation is not intended as a substitute for and is not to be used for determining suitability or reliability of these products for specific user applications

| | |
|---|---|
| **Net weight** | 0.15 kg |
| **Power consumption in W** | 3.6 W 24 V DC typical<br>3.9 W 24 V DC maximum<br>0.35 W 3.3 V DC typical<br>0.48 W 3.3 V DC maximum |

## Environment

| | |
|---|---|
| **Vibration resistance** | 3 gn |
| **Shock resistance** | 30 gn |
| **Ambient air temperature for storage** | -40…85 °C |
| **Ambient air temperature for operation** | 0…60 °C |
| **Relative humidity** | 5…95 % at 55 °C without condensation |
| **IP degree of protection** | IP20 |
| **Directives** | 2014/35/EU - low voltage directive<br>2014/30/EU - electromagnetic compatibility |
| **Product certifications** | CE<br>RCM<br>CSA<br>EAC<br>Merchant Navy<br>UL |
| **Standards** | EN/IEC 61010-2-201<br>EN/IEC 61131-2<br>UL 61010-2-201<br>CSA C22.2 No 61010-2-201 |

## Packing Units

| | |
|---|---|
| **Unit Type of Package 1** | PCE |
| **Number of Units in Package 1** | 1 |
| **Package 1 Weight** | 174.0 g |
| **Package 1 Height** | 5.3 cm |
| **Package 1 width** | 11 cm |
| **Package 1 Length** | 11.6 cm |
| **Unit Type of Package 2** | S02 |
| **Number of Units in Package 2** | 15 |
| **Package 2 Weight** | 2.89 kg |
| **Package 2 Height** | 15 cm |
| **Package 2 width** | 30 cm |
| **Package 2 Length** | 40 cm |

## Offer Sustainability

| | |
|---|---|
| **Sustainable offer status** | Green Premium product |
| **REACh Regulation** | REACh Declaration |
| **REACh free of SVHC** | Yes |
| **EU RoHS Directive** | Pro-active compliance (Product out of EU RoHS legal scope)<br>EU RoHS Declaration |
| **Mercury free** | Yes |
| **RoHS exemption information** | Yes |
| **China RoHS Regulation** | China RoHS declaration |
| **Environmental Disclosure** | Product Environmental Profile |

| | |
|---|---|
| **Circularity Profile** | End of Life Information |
| **WEEE** | The product must be disposed on European Union markets following specific waste collection and never end up in rubbish bins |
| **California proposition 65** | WARNING: This product can expose you to chemicals including: Lead and lead compounds, which is known to the State of California to cause cancer and birth defects or other reproductive harm. For more information go to www.P65Warnings.ca.gov |

## Contractual warranty

| | |
|---|---|
| **Warranty** | 18 months |

# Product data sheet BMXAMO0802

Dimensions Drawings

## Modules Mounted on Racks

### Dimensions

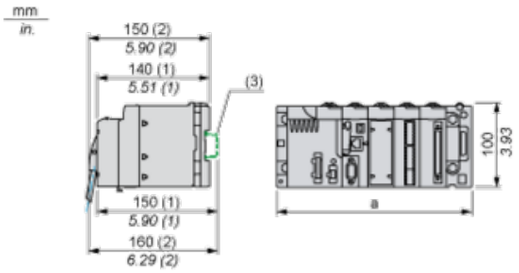


**(1)** With removable terminal block (cage, screw or spring).

**(2)** With FCN connector.

**(3)** On AM1 ED rail: 35 mm wide, 15 mm deep. Only possible with BMXXBP0400/0400H/0600/0600H/0800/0800H rack.

| Rack references | a in mm | a in in. |
|---|---|---|
| BMXXBP0400 and BMXXBP0400H | 242.4 | 09.54 |
| BMXXBP0600 and BMXXBP0600H | 307.6 | 12.11 |
| BMXXBP0800 and BMXXBP0800H | 372.8 | 14.68 |
| BMXXBP1200 and BMXXBP1200H | 503.2 | 19.81 |

## Wiring Diagram

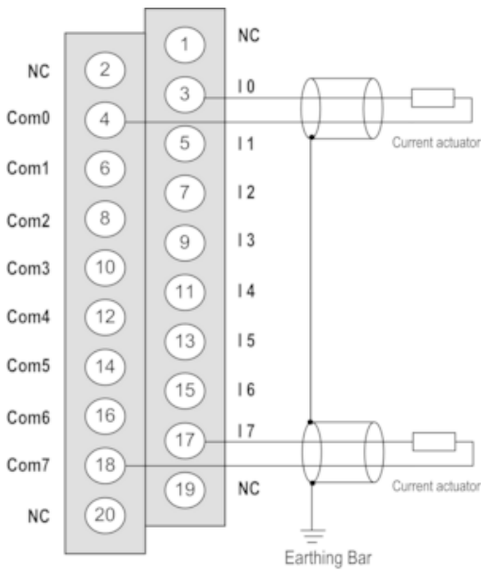


**Ix** + pole input for channel x.

**COMx** - pole input for channel x, COMx are connected together internally.

The current loop is self-powered by the output and does not request any external supply.