AC/DC Convertor IC

Non-isolated Type PWM DC/DC Converter IC Built-in Switching MOSFET

BM2Pxx1X-Z Series

General Description

The PWM type DC/DC converter for AC/DC provides an optimum system for all products that include an electrical outlet. It enables simpler design of a high effective converter specializing in non-isolation.

By a built-in startup circuit that tolerates 650 V, this IC contributes to low power consumption. A current detection resistor as internal device realizes the small power supply designs. Since a current mode control is utilized, the current can be restricted in each cycle and an excellent performance is demonstrated in the bandwidth and transient response. The switching frequency is fixed to 65 kHz. A frequency hopping function is also on chip, and it contributes to low EMI. In addition, a built-in super junction MOSFET which tolerates 650 V makes the design easy.

Features

- PWM Current Mode Method
- Frequency Hopping Function
- Burst Operation at Light Load
- Built-in 650 V Startup Circuit
- Built-in 650 V Super Junction MOSFET
- VCC UVLO (Under Voltage Lockout)
- VCC OVP (Over Voltage Protection)
- Over Current Detection Function per Cycle
- Soft Start Function

Key Specifications

- Power Supply Voltage Range DRAIN Pin: 650 V (Max)
- Current at Switching Operation: 850 µA (Typ)
- Current at Burst Operation: 450 µA (Typ)
- Switching Frequency: 65 kHz (Typ)
- Operation Temperature Range: -40 °C to +105 °C
- MOSFET ON Resistor: 1.5 Ω (Typ)

Package

DIP7K

W (Typ) x D (Typ) x H (Max)

9.27 mm x 6.35 mm x 8.63 mm
pitch 2.54 mm

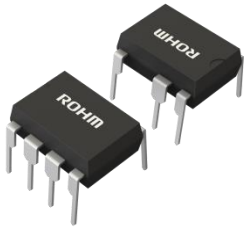

Applications

Household Appliances such as LED Lights, Air-conditioners and Cleaners

Lineup

Product Name	VCC Control Voltage
BM2P101X-Z	10.00 V
BM2P121X-Z	12.00 V
BM2P131X-Z	13.00 V
BM2P141X-Z	14.00 V
BM2P151X-Z	15.00 V
BM2P161X-Z	16.80 V
BM2P181X-Z	18.00 V
BM2P201X-Z	20.00 V
BM2P241X-Z	24.80 V

Typical Application Circuit

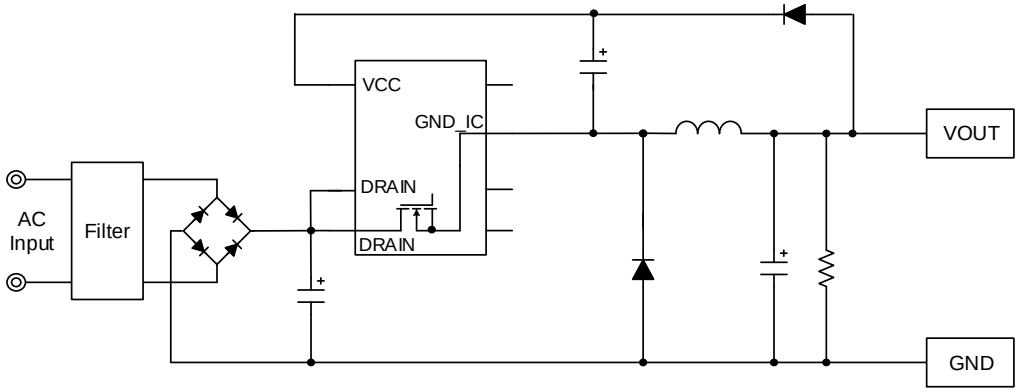

○Product structure : Silicon integrated circuit ○This product has no designed protection against radioactive rays

© 2018 ROHM Co., Ltd. All rights reserved.

Pin Configuration

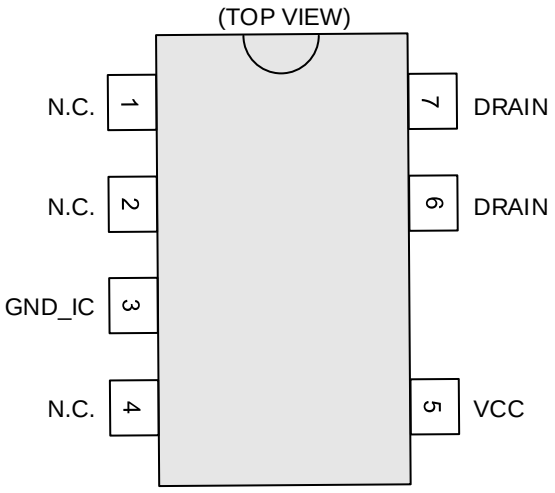

Pin Descriptions

Pin No.	Pin Name	I/O	Function	ESD Diode	
				VCC	GND_IC
1	N.C.	-	Non connection	-	-
2	N.C.	-	Non connection	-	-
3	GND_IC	I/O	GND pin	✓	-
4	N.C.	-	Non connection	-	-
5	VCC	I	Power supply input pin	-	✓
6	DRAIN	I/O	MOSFET DRAIN pin	-	✓
7	DRAIN	I/O	MOSFET DRAIN pin	-	✓

Block Diagram

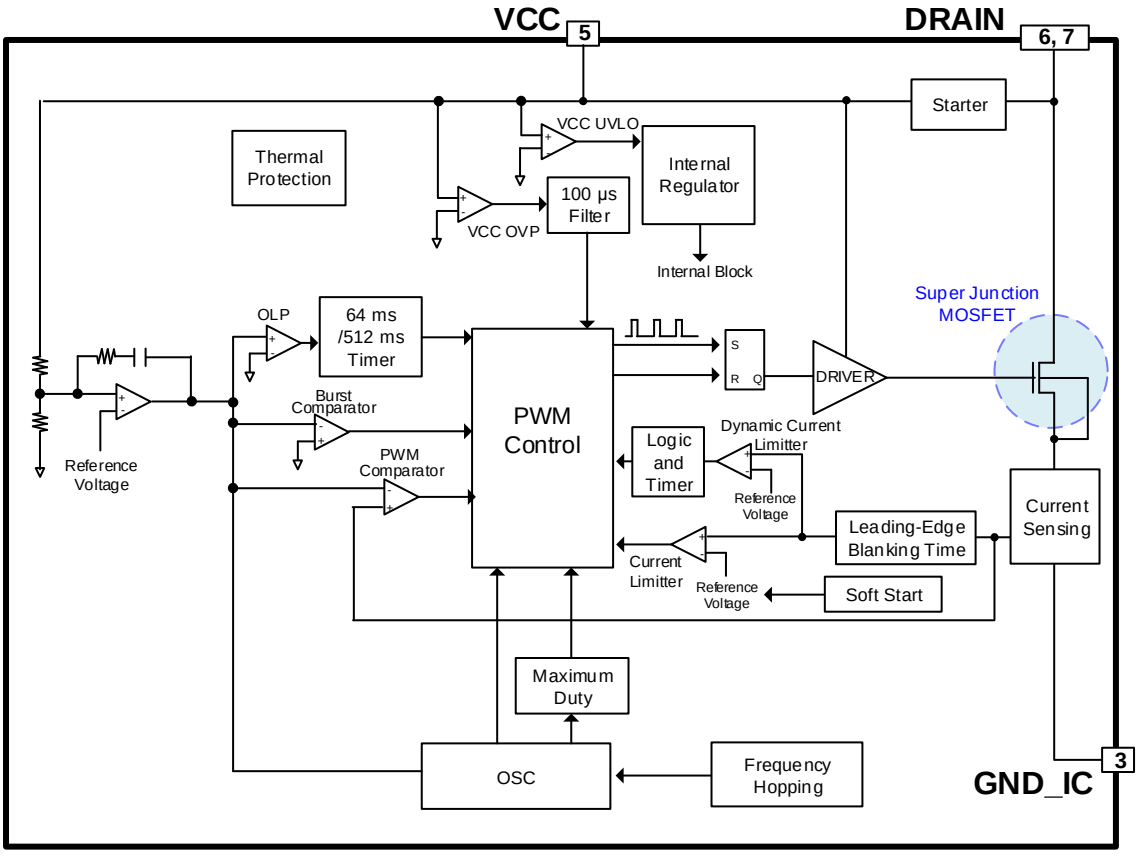

© 2018 ROHM Co., Ltd. All rights reserved.

Description of Blocks

1 Back Converter

This is the IC for exclusive use of non-isolated type back converter.
Basic operation of back converter is shown below.

1.1 When the Switching MOSFET is ON

Current I_L flows to coil L and energy is stored when the MOSFET turns ON. At this moment, the GND_IC pin voltage becomes near the DRAIN pin voltage, and the diode D1 is OFF.

$$I_L = \frac{(V_{IN}-V_{OUT})}{L} \times t_{ON} \quad [A]$$

Where:
I_L is the current flowing to the coil.
V_{IN} is the voltage applied to the DRAIN pin.
V_{OUT} is the output voltage.
L is the value of coil.
t_{ON} is the term that the MOSFET is on.

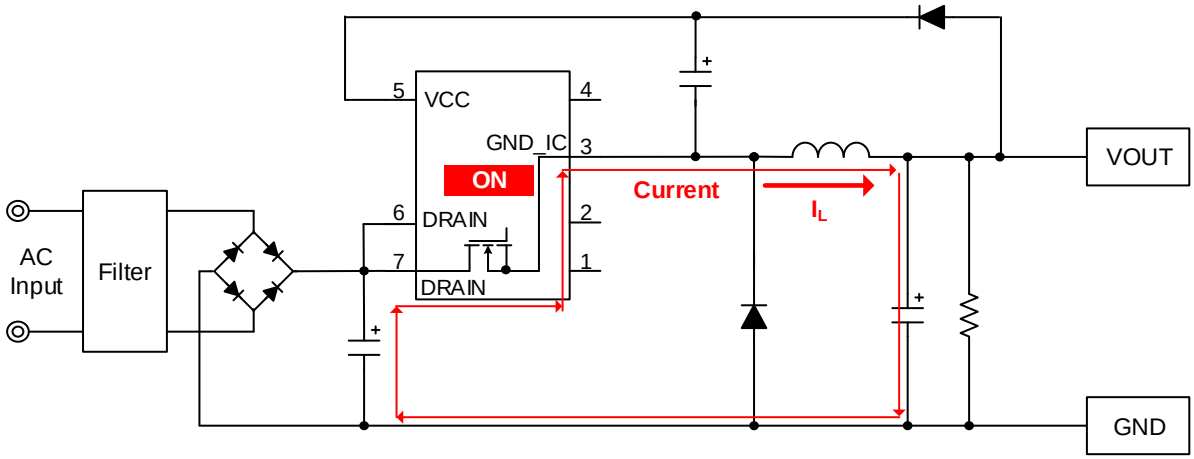

Figure 1. Back Converter Operation (MOSFET = ON)

© 2018 ROHM Co., Ltd. All rights reserved.

1 Back Converter – continued

1.2 When the Switching MOSFET is OFF

The energy stored in the coil is output via the diode when the MOSFET turns OFF.

$$I_L = \frac{V_{OUT}}{L} \times t_{OFF} \quad [A]$$

Where:
I_L is the current flowing to the coil.
V_{OUT} is the output voltage.
L is the value of coil.
t_{OFF} is the term that the MOSFET is off.

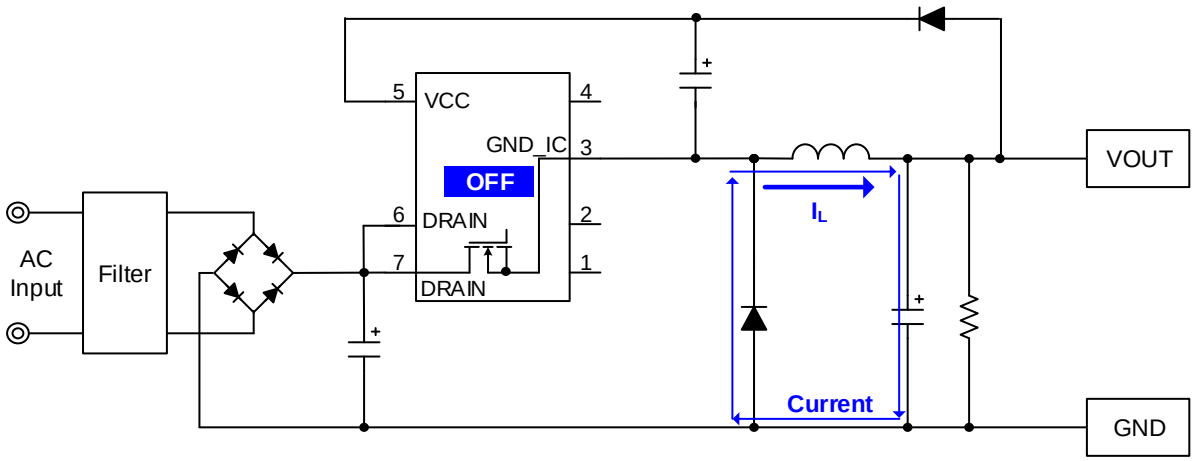

Figure 2. Back Converter Operation (MOSFET = OFF)

© 2018 ROHM Co., Ltd. All rights reserved.

Description of Blocks – continued

2 Startup Sequences

Startup sequences are shown in Figure 3. See the sections below for detailed descriptions.

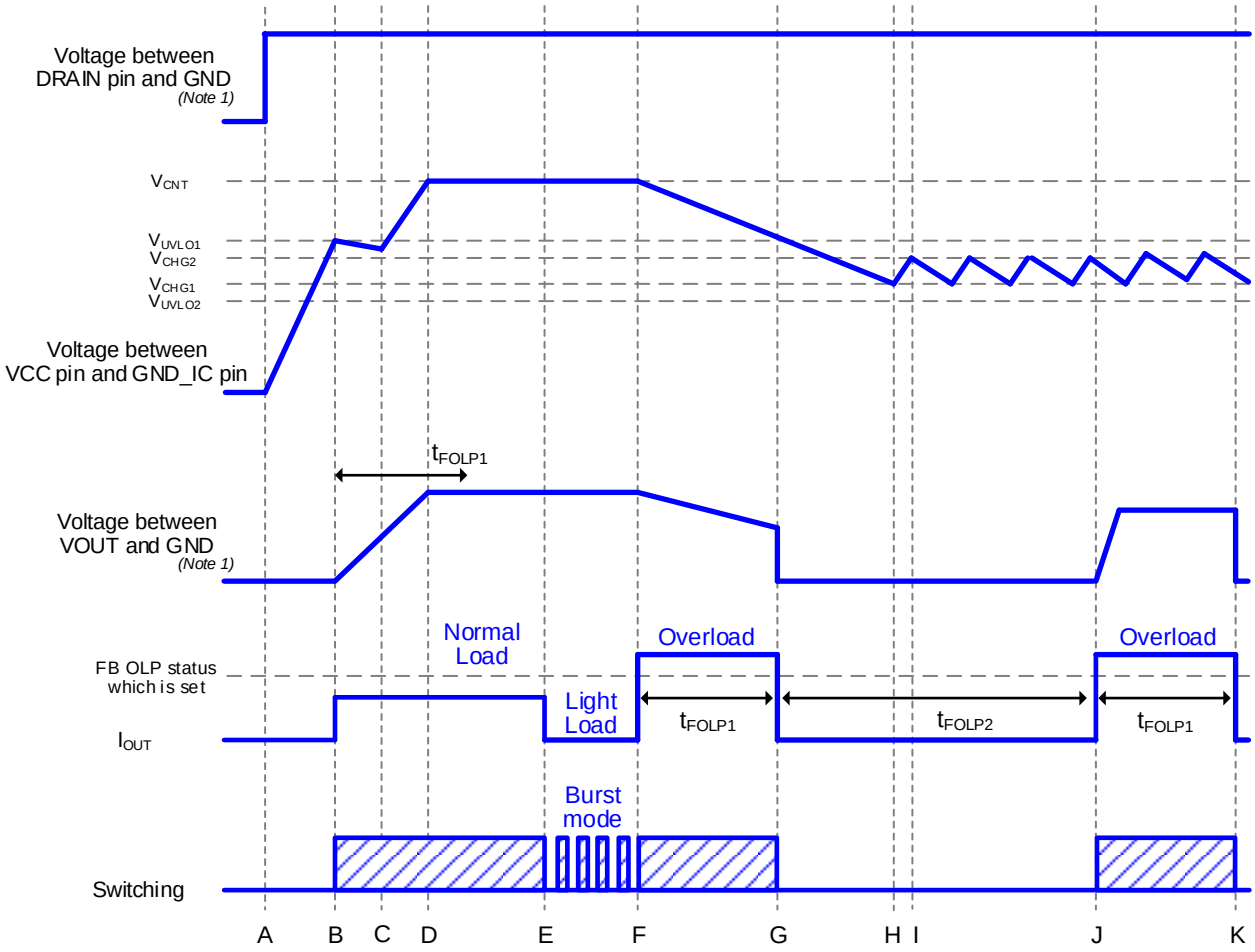

(Note 1) This GND does not mean the GND_IC pin of the IC.

Figure 3. Startup Sequences Timing Chart

A: The input voltage is applied to the DRAIN pin and the VCC pin voltage rises.
B: If the VCC pin voltage exceeds V_{UVLO1}, the IC starts to operate. And if the IC judges the other protection functions as normal condition, it starts the switching operation. The soft start function limits the over current detection voltage to prevent any excessive voltage or current rising. When the switching operation starts, the output voltage rises.
C: Until the output voltage becomes a constant value or more from startup, the VCC pin voltage drops by the VCC pin current consumption.
D: After the switching operation starts, it is necessary that the output voltage is set to become the rated voltage within t_{FOLP1}.
E: At light load, the IC starts the burst operation to restrict the power consumption.
F: When the load exceeds a certain electric power, the IC starts the overload operation.
G: If the overload status which is set lasts for t_{FOLP1}, the switching operation is turned off.
H: When the VCC pin voltage becomes less than V_{CHG1}, the VCC recharge function operates.
I: When the VCC pin voltage becomes more than V_{CHG2}, the recharge function stops operating.
J: After t_{FOLP2} period from G, the switching operation starts.
K: Same as G.

© 2018 ROHM Co., Ltd. All rights reserved.

Description of Blocks – continued

3 Stop Sequences

Stop sequences are shown in Figure 4.

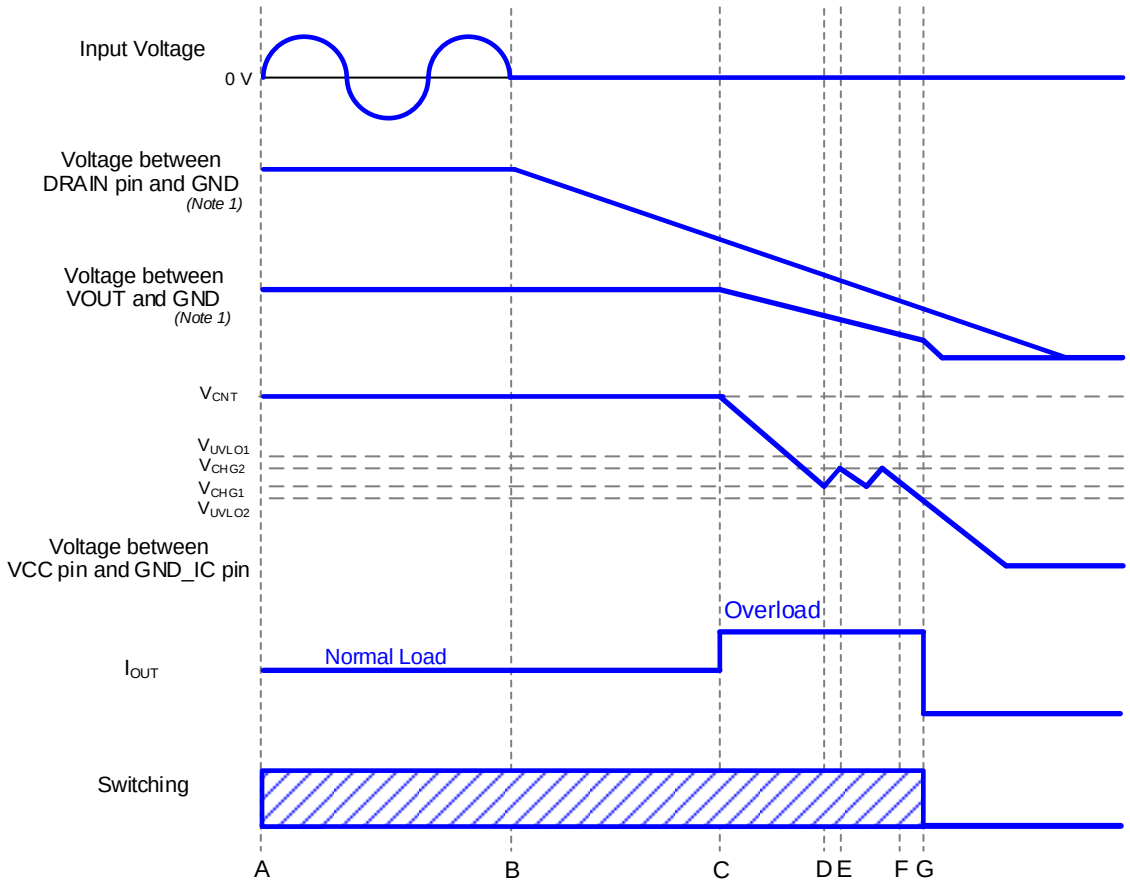

(Note 1) This GND does not mean the GND_IC pin of the IC.

Figure 4. Stop Sequences Timing Chart

A: Normal operation
B: When the input voltage is stopped, the DRAIN pin voltage starts to drop.
C: If the DRAIN pin voltage drops, the ON duty of the switching becomes maximum and FB OLP operates. And the VCC pin voltage starts to drop if the output voltage drops.
D: When the VCC pin voltage becomes less than V_{CHG1}, the VCC recharge function operates.
E: When the VCC pin voltage becomes more than V_{CHG2}, the VCC recharge function stops operating.
F: When the VCC pin voltage becomes less than V_{CHG1}, the VCC recharge function operates. However, the supply to the VCC pin decreases and the VCC pin voltage continues to drop because the DRAIN pin voltage is low.
G: When the VCC pin voltage becomes less than V_{UVLO2}, the switching operation is stopped.

© 2018 ROHM Co., Ltd. All rights reserved.

Description of Blocks – continued

4 Startup Circuit

This IC enables low standby electric power and high-speed startup because it has a built-in startup circuit. The current consumption after startup is only OFF current I_{START3}. The startup current flows from the DRAIN pin.

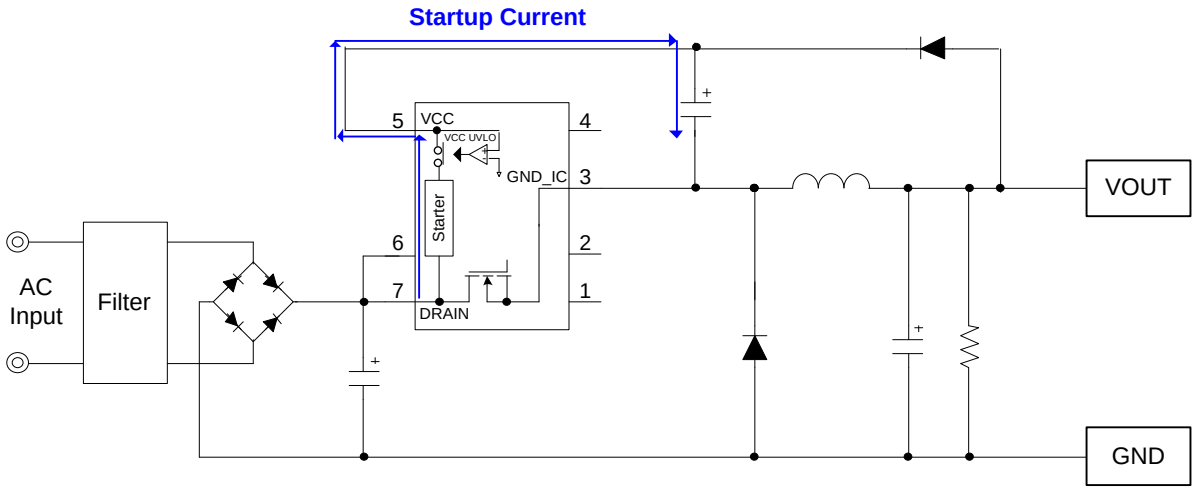

Figure 5. Startup Circuit

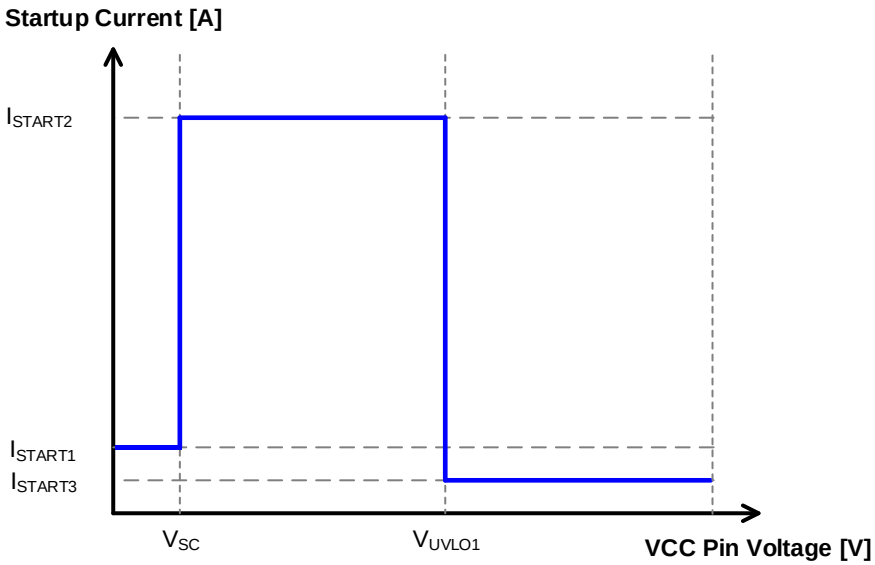

Figure 6. Startup Current vs VCC Pin Voltage

© 2018 ROHM Co., Ltd. All rights reserved.

Description of Blocks – continued

5 The VCC Pin Protection Function

This IC has the internal protection function at the VCC pin as shown below.

5.1 VCC UVLO/VCC OVP

VCC UVLO and VCC OVP are auto recovery type comparators that have voltage hysteresis. VCC OVP has an internal mask time and its detection is performed if the condition that the VCC pin voltage is V_{OVP1} or more lasts for t_{COMP}. The recovery requirement is the VCC pin voltage becomes less than V_{OVP2}.

5.2 VCC Recharge Function

If the VCC pin voltage drops to less than V_{CHG1} after once the VCC pin becomes more than V_{UVLO1} and the IC starts to operate, the VCC recharge function operates. At this time, the VCC pin is recharged from the DRAIN pin through the startup circuit. When the VCC pin voltage becomes more than V_{CHG2}, this recharge is stopped.

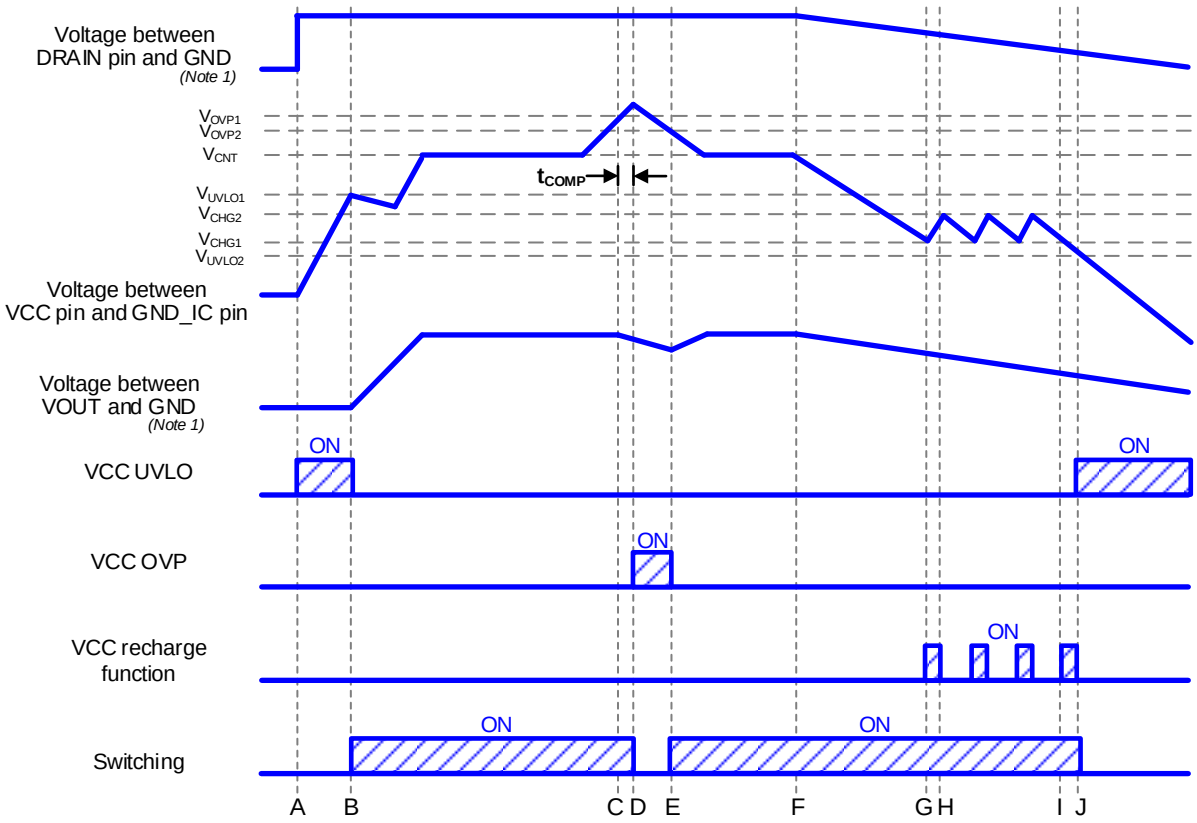

(Note 1) This GND does not mean the GND_IC pin of the IC.

Figure 7. VCC UVLO/VCC OVP/VCC Recharge Function Timing Chart

A: The input voltage is applied to the DRAIN pin and the VCC pin voltage rises.
B: When the VCC pin voltage becomes higher than V_{UVLO1}, the IC starts operating. And if the IC judges the other protection functions as normal condition, it starts switching operation. The soft start function limits the over current detection current value to prevent any excessive voltage or current rising. When the switching operation starts, the output voltage rises.
C: When the VCC pin voltage becomes more than V_{OVP1}, VCC OVP timer operates.
D: When the condition that the VCC pin voltage is more than V_{OVP1} lasts for t_{COMP}, the IC detects VCC OVP function and stops switching operation.
E: When the VCC pin voltage becomes less than V_{OVP2}, VCC OVP is released and the switching operation restarts.
F: When the input power supply is turned OFF, the DRAIN pin voltage drops.
G: When the VCC pin voltage becomes less than V_{CHG1}, the VCC recharge function is started.
H: When the VCC pin voltage becomes more than V_{CHG2}, the VCC recharge function is stopped.
I: When the VCC pin voltage becomes less than V_{CHG1}, the VCC recharge function is started. However, the supply to the VCC pin decreases and the VCC pin voltage continues to drop because of the low DRAIN pin voltage.
J: When the VCC pin voltage becomes less than V_{UVLO2}, VCC UVLO starts operating.

© 2018 ROHM Co., Ltd. All rights reserved.

Description of Blocks – continued

6 DC/DC Driver

This IC performs current mode PWM control. An internal oscillator fixes the switching frequency f_{SW}. This IC has a built-in switching frequency hopping function. The maximum duty is D_{MAX}. To achieve the low power consumption at light load, it also has an internal burst mode circuit.

6.1 Setting of the Output Voltage V_{OUT}

Because of adopting the non-isolated type without photo coupler, the VCC pin voltage should be set to the rated value. This VCC pin voltage means the voltage between the VCC pin and the GND_IC pin.
The output voltage V_{OUT} is defined by the formula below.
The voltage when the MOSFET is off is shown in Figure 8.

$$V_{OUT} = V_{CNT} - V_{FD1} + V_{FD2} \quad [V]$$

Where:
V_{FD1} is the forward voltage of diode D1.
V_{FD2} is the forward voltage of diode D2.
V_{CNT} is the VCC control voltage.

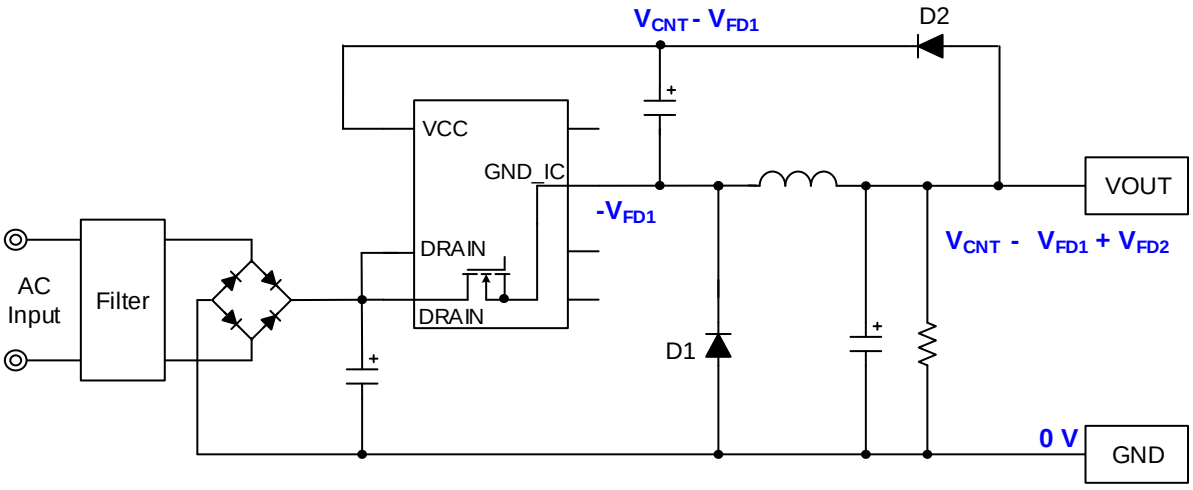

Figure 8. Back Converter Circuit (MOSFET = OFF)

The output voltage may rise at light road because the VCC pin voltage is difference from it. In this case, the output voltage should be dropped by adjusting the value of the resistor R_{OUT} which is connected to the VOUT. The location of the resistor R_{OUT} is shown in Figure 9.

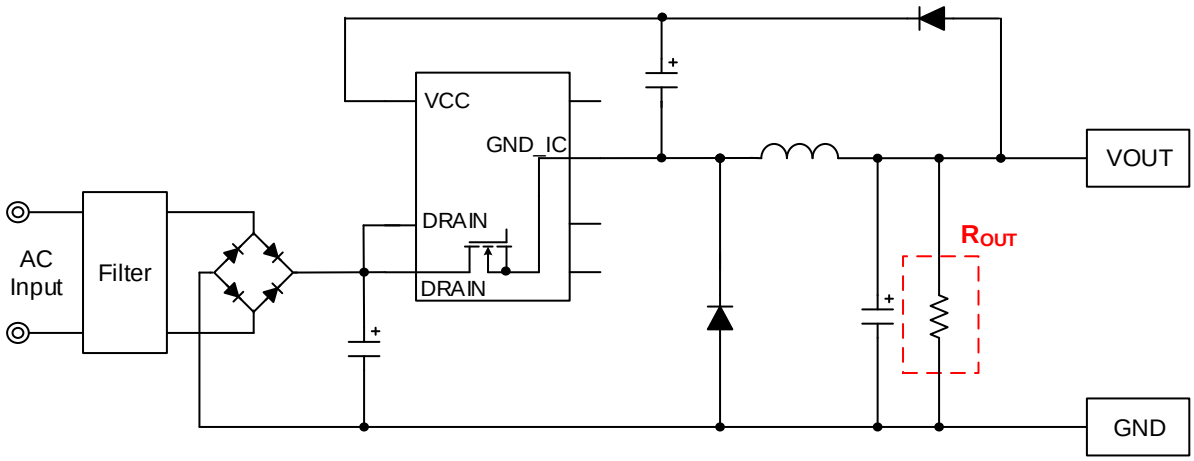

Figure 9. Location of Resistor R_{OUT}

© 2018 ROHM Co., Ltd. All rights reserved.

6.1 Setting of the Output Voltage V_{OUT} – continued

This IC enables simpler constitution with a few external parts by fixing the VCC pin voltage. When adjust the output voltage, adding zener diodes makes it variable. However, it is necessary to consider the dispersion of the zener diodes.
The variable output voltage is defined by the formula below. The voltage when the MOSFET is off is shown in Figure 10.

$$V_{OUT} = V_{CNT} - V_{FD1} + V_{FD2} + V_{ZD1} \quad [V]$$

Where:
V_{FD1} is the forward voltage of diode D1.
V_{FD2} is the forward voltage of diode D2.
V_{ZD1} is the zener diode ZD1 voltage.
V_{CNT} is the VCC control voltage.

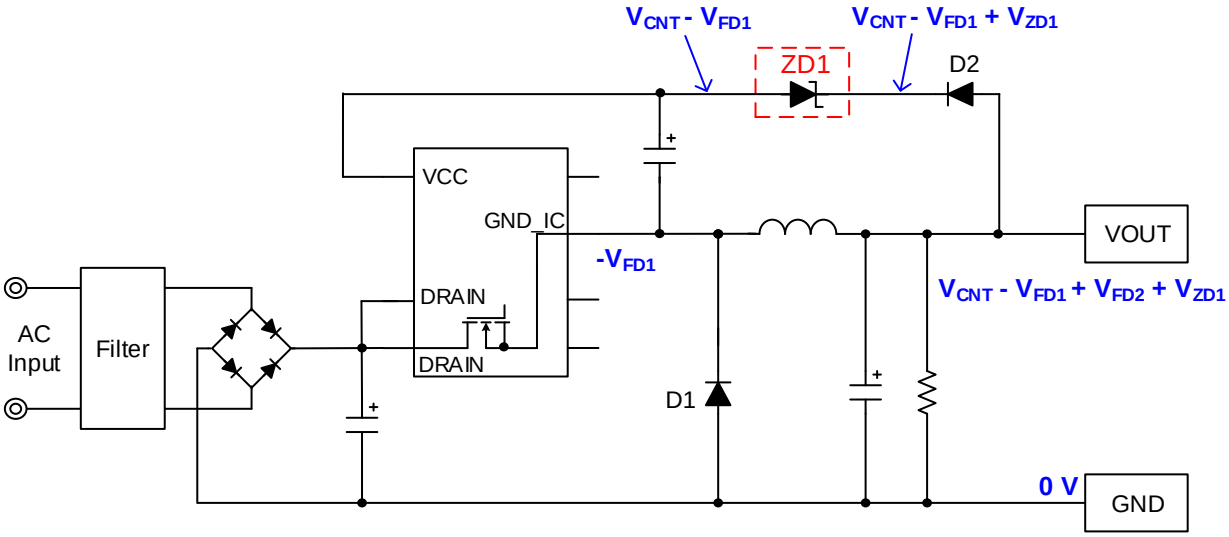

Figure 10. Back Converter Output Dispersion Circuit (MOSFET = OFF)

6.2 Frequency Circuit

mode 1: Burst Mode	(The intermittent operation starts.)
mode 2: Frequency Modulation Mode	(It reduces the frequency.)
mode 3: Fixed Frequency Mode	(It operates in the maximum frequency.)
mode 4: Overload Mode	(The intermittent operation starts.)

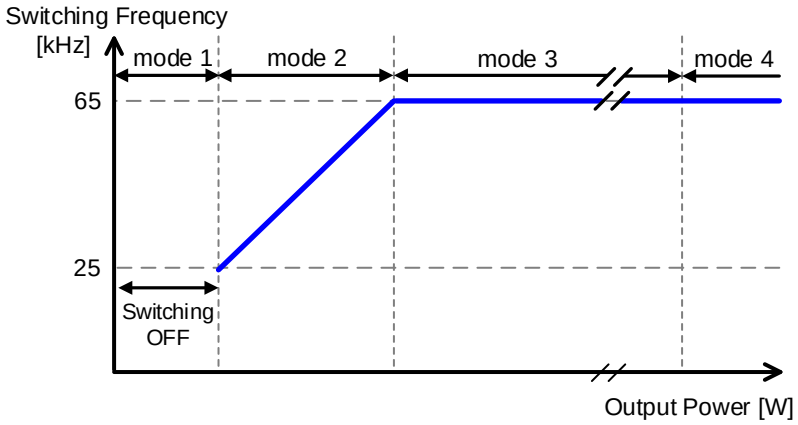

Figure 11. State Transition of Switching Frequency

6.3 Frequency Hopping Function

Frequency hopping function achieves low EMI by change the frequency at random. The upper limit of the frequency's wave width is ±6 % (Typ) for basic frequency.

© 2018 ROHM Co., Ltd. All rights reserved.

6 DC/DC Driver – continued

6.4 Over Current Detection Function

This IC has a built-in over current detection function per switching cycle. This function stops the switching operation if the coil current I_L becomes I_{PEAK} or more. Additionally, an internal current detection resistor contributes to the reduction of parts and improvement of efficiency. The peak current which the IC switches to the overload mode is determined by the formula below.

$$Peak\ \ current = I_{PEAK} + \frac{(V_{DRAIN} - V_{OUT})}{L} \times tdelay \quad [A]$$

Where:

I_{PEAK} is the over current detection current.
V_{DRAIN} is the DRAIN pin voltage.
V_{OUT} is the output voltage.
L is the coil value.
$tdelay$ is the delay time after a detection of over current.

6.5 Dynamic Over Current Detection Function

This IC has a built-in dynamic over current detection function.
In the case that the coil current I_L exceeds I_{DPEAK} two times consecutively, it stops the switching operation for t_{DPEAK}.

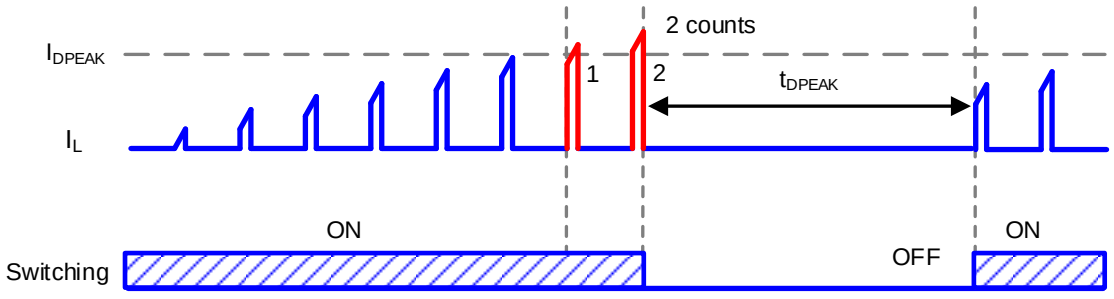

Figure 12. Dynamic Over Current Limiter

© 2018 ROHM Co., Ltd. All rights reserved.

6 DC/DC Driver – continued

6.6 Soft Start Function

At startup, this function controls the over current detection current in order to prevent any excessive voltage or current rising. The details are shown in Figure 13. The IC enables the soft start operation by changing the over current detection current with time.

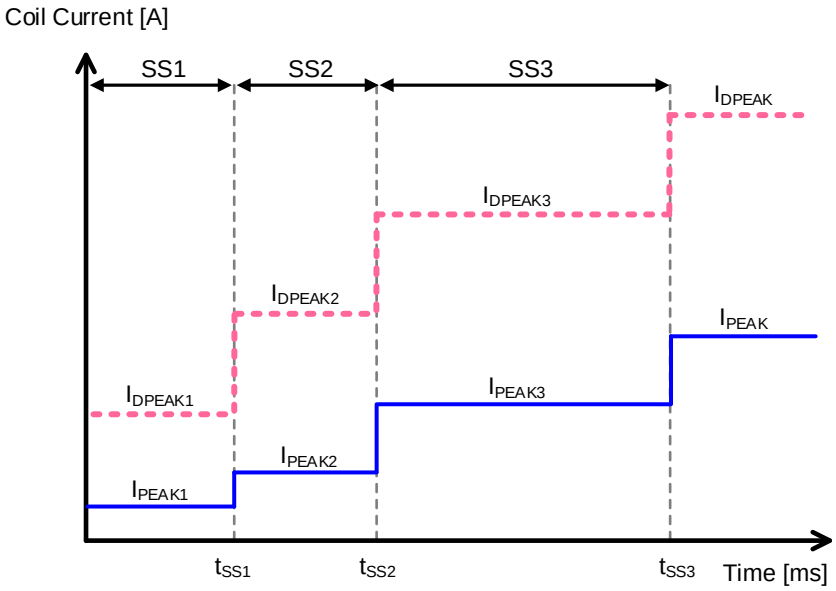

Figure 13. Soft Start Function

7 FB OLP (Overload Protection)

FB OLP monitors load status and stops the switching operation at an overload status. In the overload condition, the output voltage drops. Therefore, the function judges the status as an overload and the switching operation stops, when the status that the electric power remains at the value set in the internal IC or more lasts for t_{FOLP1}. The recovery after the detection of FB OLP is t_{FOLP2} later.

8 TSD (Thermal Shutdown)

TSD stops the switching operation if the IC's temperature becomes T_{SD1} or more.

© 2018 ROHM Co., Ltd. All rights reserved.

Description of Blocks – continued

9 Operation Mode of Protection Function

The operation modes of each protection function are shown in Table 1.

Table 1. The Operation Modes of Protection Functions

	VCC UVLO	VCC OVP	TSD	FB OLP
Detection Requirements	VCC pin voltage < V_{UVLO2} (at voltage dropping)	VCC pin voltage ≥ V_{OVP1} (at voltage rising)	Junction temperature ≥ T_{SD1} (at temperature rising)	Coil current I_L ≥ I_{PEAK}
Release Requirements	VCC pin voltage ≥ V_{UVLO1} (at voltage rising)	VCC pin voltage < V_{OVP2} (at voltage dropping)	Junction temperature < T_{SD2} (at temperature dropping) or VCC UVLO detection	Coil current I_L < I_{PEAK} or VCC UVLO detection
Detection Timer (Reset Condition)	–	t_{COMP} (VCC pin voltage < V_{OVP2})	t_{COMP} (Junction temperature < T_{SD2})	t_{FOLP1} (Coil current I_L < I_{PEAK})
Release Timer (Reset Condition)	–	–	–	t_{FOLP2} (Coil current I_L ≥ I_{PEAK})
Auto Recovery or Latch	Auto recovery	Auto recovery	Auto recovery	Auto recovery

© 2018 ROHM Co., Ltd. All rights reserved.

Description of Blocks – continued

10 External Components

Each part should be adopted considering the input voltage and output load condition.
Figure 14 shows the application circuit.

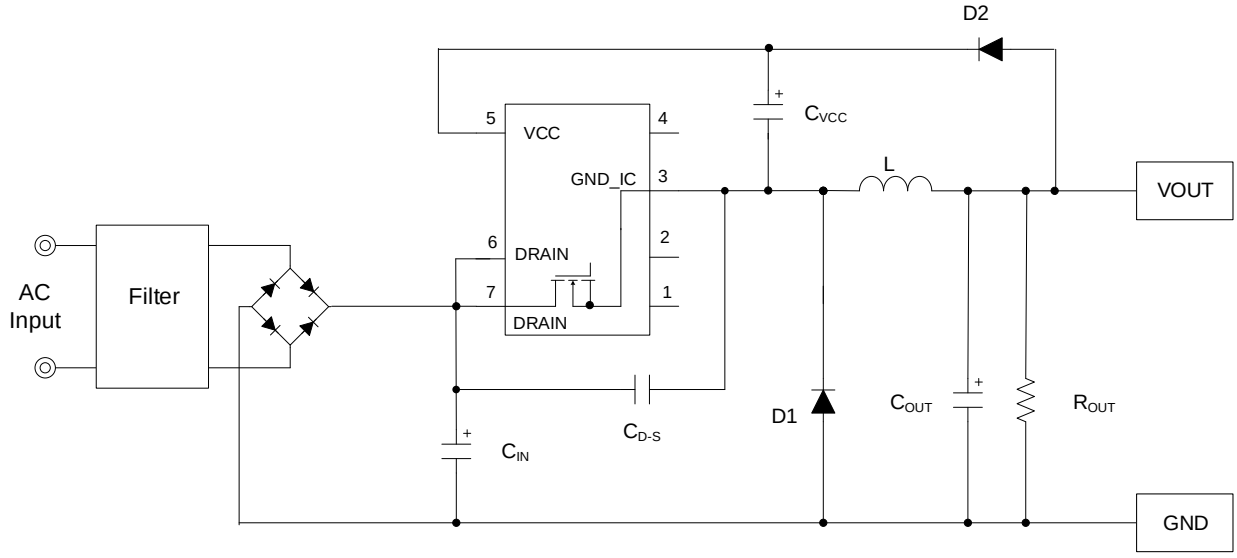

Figure 14. Application Circuit

10.1 Output Capacitor C_{OUT}

The output capacitor C_{OUT} should be set to meet the specification of the ripple voltage and start within t_{FOLP1}. It is recommended for C_{OUT} to be set to 100 µF or more.

10.2 Inductor L

The value of inductor should be set considering the input voltage and output voltage. If the inductor value is too large, the switching operation becomes continuous mode and increases heat. And if the inductor value is too small, it is impossible that the IC controls in the ON width ≤ t_{MINON}, so there is possibility of the over current detection in spite of the normal operation load. It is recommended for L to be set to about 270 µH to 680 µH.

10.3 VCC Pin Capacitor C_{VCC}

The VCC pin capacitor C_{VCC} adjusts startup time of the IC and response of Error AMP.
It is recommended to be set to less than about 1/100 value of C_{OUT}.

10.4 Capacitor between the DRAIN Pin and the GND_IC Pin C_{D-S}

It is recommended to be set to 22 pF or less if the capacitor is connected between the DRAIN pin and the GND_IC pin.

© 2018 ROHM Co., Ltd. All rights reserved.

Absolute Maximum Ratings (Ta = 25 °C)

Parameter	Symbol	Rating	Unit	Conditions
Maximum Applied Voltage 1	V_{MAX1}	-0.3 to +650	V	DRAIN pin voltage
Maximum Applied Voltage 2	V_{MAX2}	-0.3 to +32	V	VCC pin voltage
DRAIN Pin Current (Pulse)	I_{DD}	12.00	A	Consecutive operation
Power Dissipation	Pd	1.00	W	*(Note 1)*
Maximum Junction Temperature	Tjmax	150	°C	
Storage Temperature Range	Tstg	-55 to +150	°C	

Caution 1: *Operating the IC over the absolute maximum ratings may damage the IC. The damage can either be a short circuit between pins or an open circuit between pins and the internal circuitry. Therefore, it is important to consider circuit protection measures, such as adding a fuse, in case the IC is operated over the absolute maximum ratings.*

Caution 2: *Should by any chance the maximum junction temperature rating be exceeded the rise in temperature of the chip may result in deterioration of the properties of the chip. In case of exceeding this absolute maximum rating, design a PCB with power dissipation taken into consideration by increasing board size and copper area so as not to exceed the maximum junction temperature rating.*

(Note 1) At mounted on a glass epoxy single layer PCB (70 mm x 70 mm x 1.6 mm). Derate by 8 mW/°C if the IC is used in the ambient temperature 25 °C or above.

Thermal Dissipation

Make the thermal design so that the IC operates in the following conditions.
(Because the following temperature is guarantee value, it is necessary to consider such as a margin.)

1. The ambient temperature must be 105 °C or less.
2. The IC's loss must be the power dissipation Pd or less.

The thermal abatement characteristic is as follows.
(At mounting on a glass epoxy single layer PCB which size is 70 mm x 70 mm x 1.6 mm)

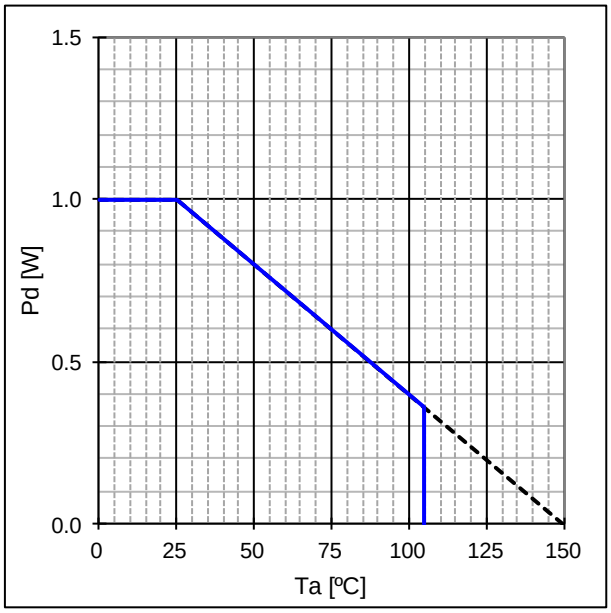

Figure 15. Thermal Abatement Characteristic

© 2018 ROHM Co., Ltd. All rights reserved.

Recommended Operating Conditions

Parameter	Symbol	Min	Typ	Max	Unit	Conditions
Power Supply Voltage Range 1	V_{DRAIN}	-	-	650	V	DRAIN pin voltage
Power Supply Voltage Range 2	V_{CC}	9.50	-	10.80	V	VCC pin voltage (BM2P101X-Z)
Power Supply Voltage Range 2	V_{CC}	9.50	-	12.96	V	VCC pin voltage (BM2P121X-Z)
Power Supply Voltage Range 2	V_{CC}	12.00	-	14.04	V	VCC pin voltage (BM2P131X-Z)
Power Supply Voltage Range 2	V_{CC}	12.00	-	15.12	V	VCC pin voltage (BM2P141X-Z)
Power Supply Voltage Range 2	V_{CC}	12.00	-	16.20	V	VCC pin voltage (BM2P151X-Z)
Power Supply Voltage Range 2	V_{CC}	12.00	-	18.14	V	VCC pin voltage (BM2P161X-Z)
Power Supply Voltage Range 2	V_{CC}	12.00	-	19.44	V	VCC pin voltage (BM2P181X-Z)
Power Supply Voltage Range 2	V_{CC}	12.00	-	21.60	V	VCC pin voltage (BM2P201X-Z)
Power Supply Voltage Range 2	V_{CC}	12.00	-	26.78	V	VCC pin voltage (BM2P241X-Z)
Operating Temperature	Topr	-40	-	+105	°C	Surrounding temperature

Electrical Characteristics in MOSFET Part

(Unless otherwise noted, Ta = 25 °C)

Parameter	Symbol	Min	Typ	Max	Unit	Conditions
Voltage between DRAIN and GND_IC Pin	$V_{(BR)DDS}$	650	-	-	V	I_D = 1 mA, V_{GS} = 0 V
DRAIN Pin Leak Current	I_{DSS}	-	0	100	μA	V_{DS} = 650 V, V_{GS} = 0 V
ON Resistor	$R_{DS(ON)}$	-	1.5	2.0	Ω	I_D = 0.25 A, V_{GS} = 10 V

Electrical Characteristics in Startup Circuit Part

(Unless otherwise noted, Ta = 25 °C)

Parameter	Symbol	Min	Typ	Max	Unit	Conditions
Startup Current 1	I_{START1}	0.150	0.300	0.600	mA	VCC pin voltage = 0 V
Startup Current 2	I_{START2}	1.200	3.000	6.000	mA	VCC pin voltage = 7 V
OFF Current	I_{START3}	-	10	20	μA	After UVLO is released
Startup Current Switching Voltage	V_{SC}	0.500	0.800	1.200	V	

© 2018 ROHM Co., Ltd. All rights reserved.

Electrical Characteristics in Control IC Part

(Unless otherwise noted, Ta = 25 °C)

Parameter	Symbol	Min	Typ	Max	Unit	Conditions
Circuit Current						
Current at Switching Operation	I_{ON1}	-	850	1700	μA	DRAIN pin = open BM2P101X-Z, BM2P121X-Z BM2P131X-Z
Current at Switching Operation	I_{ON1}	-	1050	1900	μA	DRAIN pin = open BM2P141X-Z, BM2P151X-Z, BM2P161X-Z, BM2P181X-Z, BM2P201X-Z, BM2P241X-Z
Current at Burst Operation	I_{ON2}	300	450	550	μA	
VCC Control Voltage	V_{CNT}	9.90	10.00	10.10	V	BM2P101X-Z
VCC Control Voltage	V_{CNT}	11.88	12.00	12.12	V	BM2P121X-Z
VCC Control Voltage	V_{CNT}	12.87	13.00	13.13	V	BM2P131X-Z
VCC Control Voltage	V_{CNT}	13.86	14.00	14.14	V	BM2P141X-Z
VCC Control Voltage	V_{CNT}	14.85	15.00	15.15	V	BM2P151X-Z
VCC Control Voltage	V_{CNT}	16.63	16.80	16.97	V	BM2P161X-Z
VCC Control Voltage	V_{CNT}	17.82	18.00	18.18	V	BM2P181X-Z
VCC Control Voltage	V_{CNT}	19.80	20.00	20.20	V	BM2P201X-Z
VCC Control Voltage	V_{CNT}	24.55	24.80	25.05	V	BM2P241X-Z
Protection Function (BM2P101X-Z, BM2P121X-Z)						
VCC UVLO Voltage 1	V_{UVLO1}	8.10	8.80	9.50	V	At VCC pin voltage rising
VCC UVLO Voltage 2	V_{UVLO2}	6.60	7.30	8.00	V	At VCC pin voltage dropping
VCC UVLO Hysteresis	V_{UVLO3}	-	1.50	-	V	
VCC Recharge Start Voltage	V_{CHG1}	7.00	7.70	8.40	V	At VCC pin voltage dropping
VCC Recharge Stop Voltage	V_{CHG2}	7.40	8.10	8.80	V	At VCC pin voltage rising
VCC Recharge Hysteresis	V_{CHG3}	0.20	0.40	0.70	V	
Protection Function (BM2P131X-Z, BM2P141X-Z, BM2P151X-Z, BM2P161X-Z, BM2P181X-Z, BM2P201X-Z, BM2P241X-Z)						
VCC UVLO Voltage 1	V_{UVLO1}	10.20	11.10	12.00	V	At VCC pin voltage rising
VCC UVLO Voltage 2	V_{UVLO2}	8.80	9.70	10.60	V	At VCC pin voltage dropping
VCC UVLO Hysteresis	V_{UVLO3}	-	1.40	-	V	
VCC Recharge Start Voltage	V_{CHG1}	9.50	10.20	10.90	V	At VCC pin voltage dropping
VCC Recharge Stop Voltage	V_{CHG2}	9.90	10.60	11.30	V	At VCC pin voltage rising
VCC Recharge Hysteresis	V_{CHG3}	0.20	0.40	0.70	V	
Protection Function (Common throughout BM2Pxx1X-Z Series)						
VCC OVP Voltage 1	V_{OVP1}	V_{CNT} x 1.08	V_{CNT} x 1.15	V_{CNT} x 1.22	V	At VCC pin voltage rising
VCC OVP Voltage 2	V_{OVP2}	-	V_{CNT} x 1.10	-	V	At VCC pin voltage dropping
VCC OVP Hysteresis	V_{OVP3}	V_{CNT} x 0.02	-	V_{CNT} x 0.07	V	
TSD Temperature 1	T_{SD1}	120	150	180	°C	At temperature rising *(Note 1)*
TSD Temperature 2	T_{SD2}	-	85	-	°C	At temperature dropping *(Note 1)*
TSD Hysteresis	T_{SD3}	-	65	-	°C	*(Note 1)*
Timer of VCC OVP and TSD	t_{COMP}	50	100	150	μs	

(Note 1) Not 100 % tested.

© 2018 ROHM Co., Ltd. All rights reserved.

Electrical Characteristics in Control IC Part – continued
(Unless otherwise noted, Ta = 25 °C)

Parameter	Symbol	Min	Typ	Max	Unit	Conditions
PWM Type DC/DC Driver Block						
Switching Frequency	f_{SW}	60	65	70	kHz	
Frequency Hopping Width	f_{DEL}	-	4.0	-	kHz	
Maximum Duty	D_{MAX}	35	40	45	%	
FB OLP ON Detection Timer	t_{FOLP1}	40	64	88	ms	
FB OLP OFF Timer	t_{FOLP2}	332	512	692	ms	
Soft Start Time 1	t_{SS1}	2.8	4.0	5.2	ms	
Soft Start Time 2	t_{SS2}	5.6	8.0	10.4	ms	
Soft Start Time 3	t_{SS3}	11.2	16.0	20.8	ms	
Over Current Detection Block						
Over Current Detection Current	I_{PEAK}	1.80	2.00	2.20	A	
Over Current Detection Current 1	I_{PEAK1}	-	0.50	-	A	*(Note 1) (Note 2)*
Over Current Detection Current 2	I_{PEAK2}	-	1.00	-	A	*(Note 1) (Note 2)*
Over Current Detection Current 3	I_{PEAK3}	-	1.50	-	A	*(Note 1) (Note 2)*
Dynamic Over Current Detection Current	I_{DPEAK}	3.150	3.500	3.850	A	
Dynamic Over Current Detection Current 1	I_{DPEAK1}	-	0.875	-	A	*(Note 1) (Note 2)*
Dynamic Over Current Detection Current 2	I_{DPEAK2}	-	1.750	-	A	*(Note 1) (Note 2)*
Dynamic Over Current Detection Current 3	I_{DPEAK3}	-	2.625	-	A	*(Note 1) (Note 2)*
Dynamic Over Current Enforced OFF Time	t_{DPEAK}	64	128	170	µs	
Leading Edge Blanking Time	t_{LEB}	-	150	-	ns	*(Note 1)*
Minimum ON Width	t_{MINON}	-	300	550	ns	*(Note 1)*

(Note 1) Not 100 % tested.
(Note 2) Refer to Figure 13.

© 2018 ROHM Co., Ltd. All rights reserved.

Typical Performance Curves
(Reference Data)

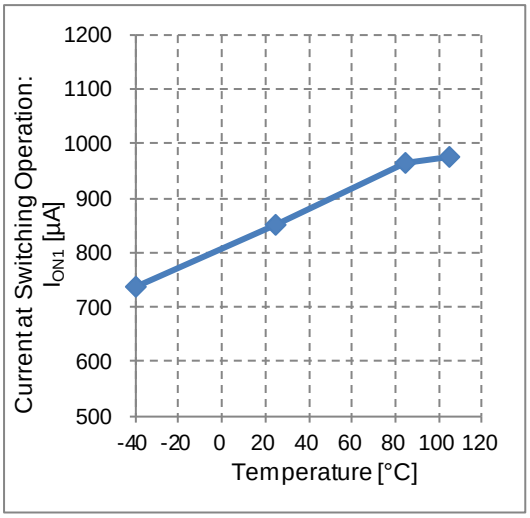

Figure 16. Current at Switching Operation vs Temperature

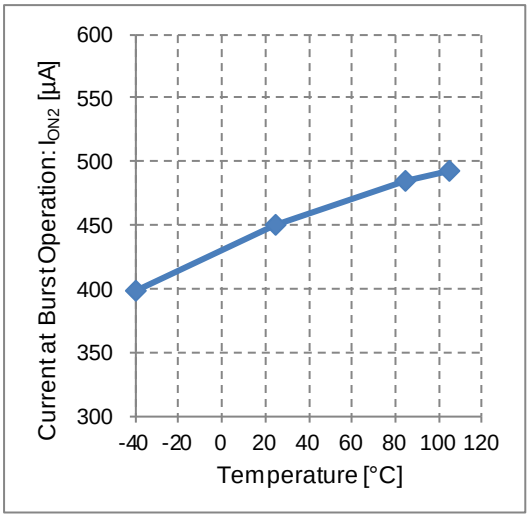

Figure 17. Current at Burst Operation vs Temperature

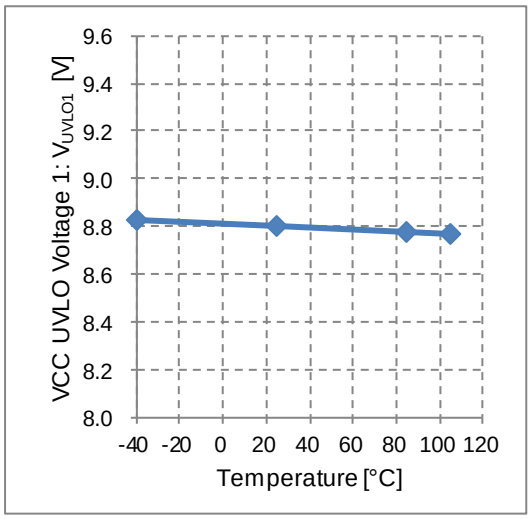

Figure 18. VCC UVLO Voltage 1 vs Temperature
(BM2P101X-Z, BM2P121X-Z)

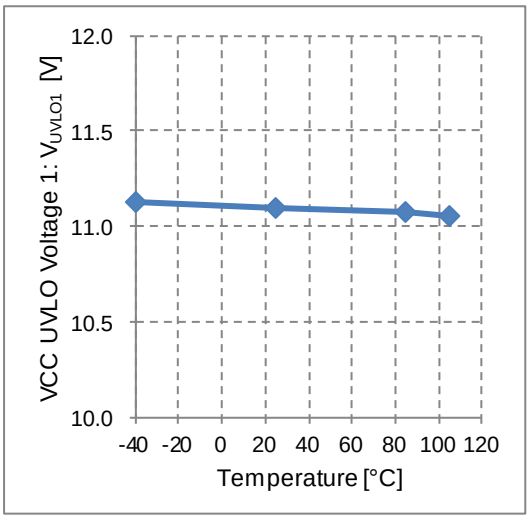

Figure 19. VCC UVLO Voltage 1 vs Temperature
(BM2P131X-Z, BM2P141X-Z, BM2P151X-Z, BM2P161X-Z, BM2P181X-Z, BM2P201X-Z, BM2P241X-Z)

© 2018 ROHM Co., Ltd. All rights reserved.

Typical Performance Curves – continued
(Reference Data)

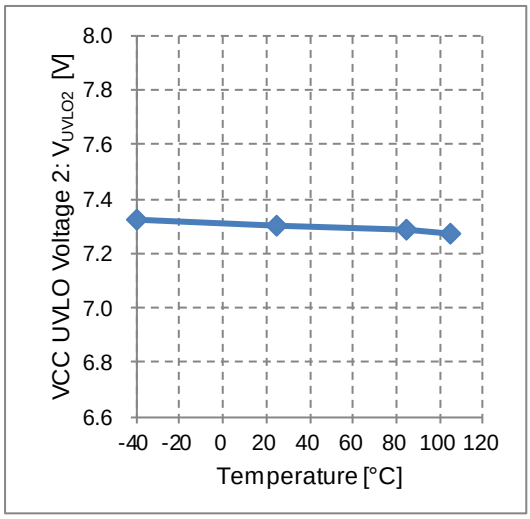

Figure 20. VCC UVLO Voltage 2 vs Temperature
(BM2P101X-Z, BM2P121X-Z)

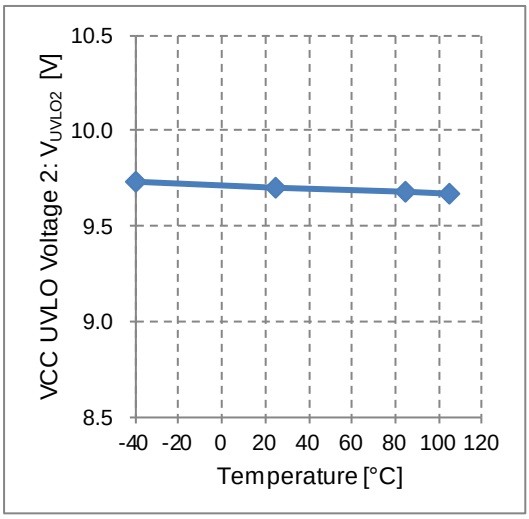

Figure 21. VCC UVLO Voltage 2 vs Temperature
(BM2P131X-Z, BM2P141X-Z, BM2P151X-Z, BM2P161X-Z, BM2P181X-Z, BM2P201X-Z, BM2P241X-Z)

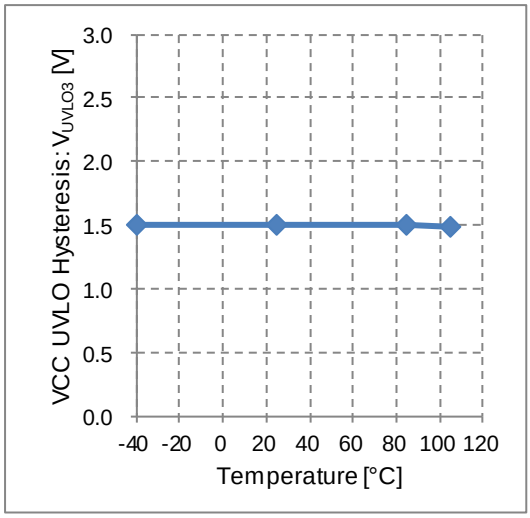

Figure 22. VCC UVLO Hysteresis vs Temperature
(BM2P101X-Z, BM2P121X-Z)

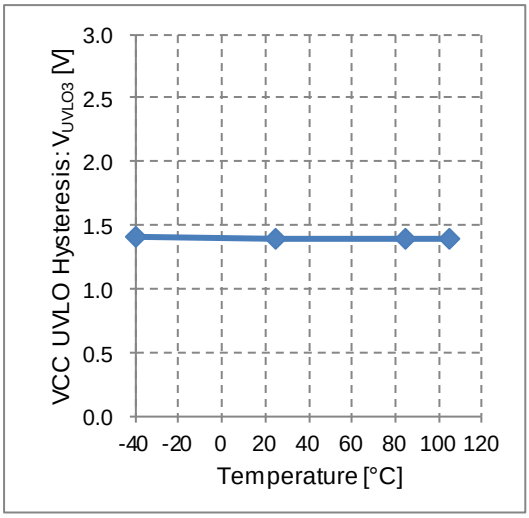

Figure 23. VCC UVLO Hysteresis vs Temperature
(BM2P131X-Z, BM2P141X-Z, BM2P151X-Z, BM2P161X-Z, BM2P181X-Z, BM2P201X-Z, BM2P241X-Z)

© 2018 ROHM Co., Ltd. All rights reserved.

Typical Performance Curves – continued
(Reference Data)

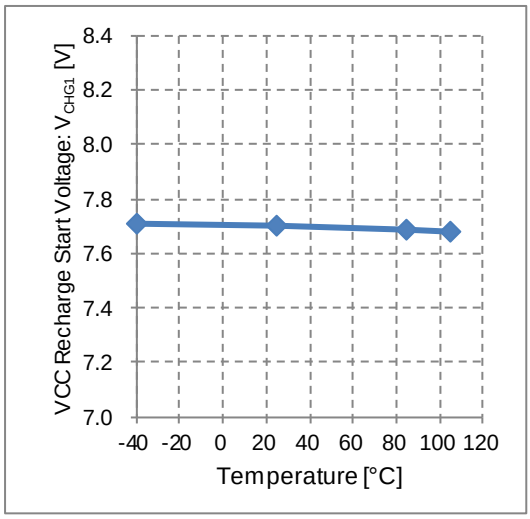

Figure 24. VCC Recharge Start Voltage vs Temperature (BM2P101X-Z, BM2P121X-Z)

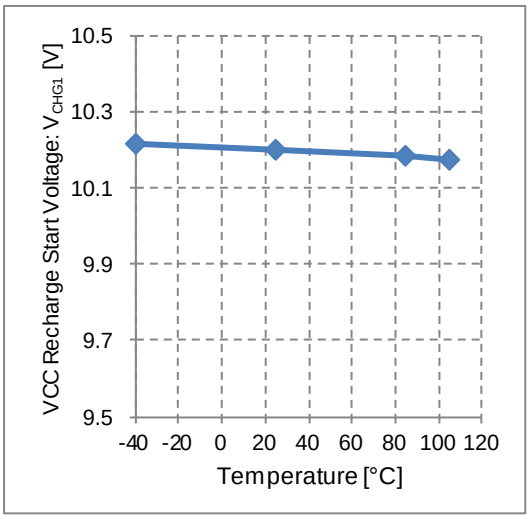

Figure 25. VCC Recharge Start Voltage vs Temperature (BM2P131X-Z, BM2P141X-Z, BM2P151X-Z, BM2P161X-Z, BM2P181X-Z, BM2P201X-Z, BM2P241X-Z)

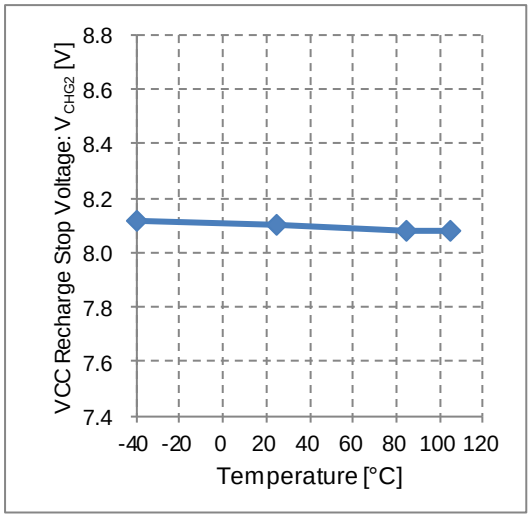

Figure 26. VCC Recharge Stop Voltage vs Temperature (BM2P101X-Z, BM2P121X-Z)

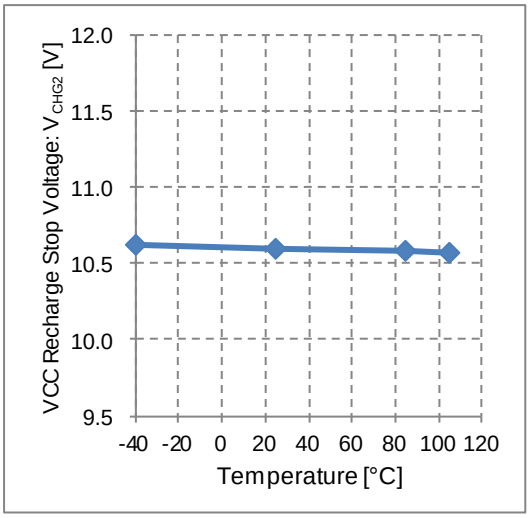

Figure 27. VCC Recharge Stop Voltage vs Temperature (BM2P131X-Z, BM2P141X-Z, BM2P151X-Z, BM2P161X-Z, BM2P181X-Z, BM2P201X-Z, BM2P241X-Z)

© 2018 ROHM Co., Ltd. All rights reserved.

Typical Performance Curves – continued
(Reference Data)

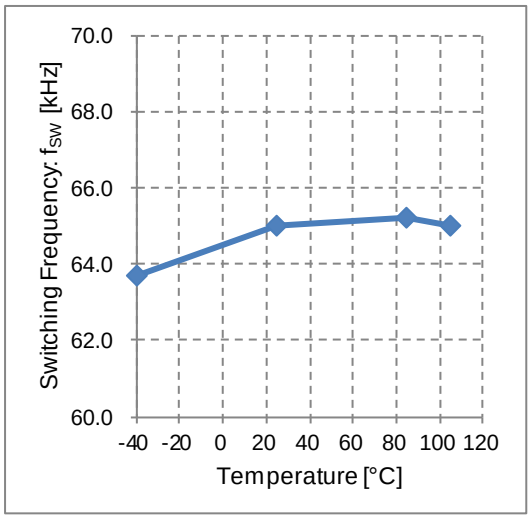

Figure 28. Switching Frequency vs Temperature

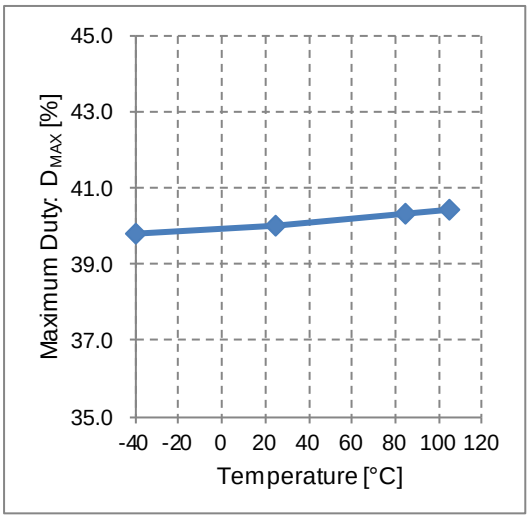

Figure 29. Maximum Duty vs Temperature

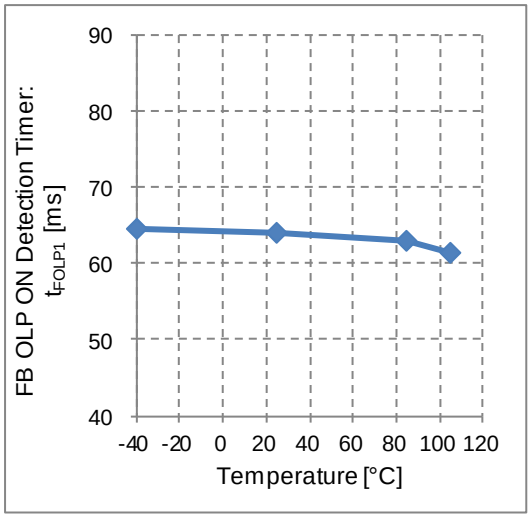

Figure 30. FB OLP ON Detection Timer vs Temperature

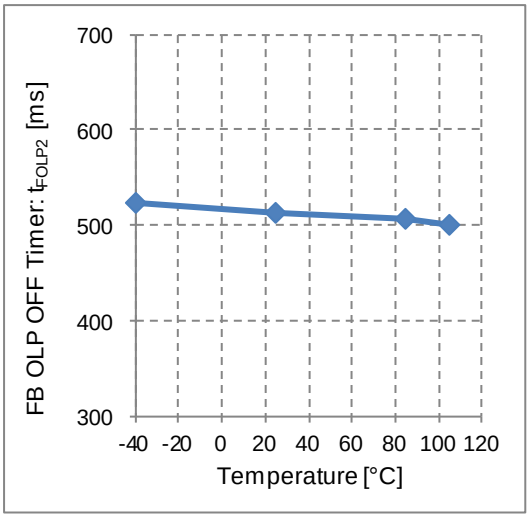

Figure 31. FB OLP OFF Timer vs Temperature

© 2018 ROHM Co., Ltd. All rights reserved.

Typical Performance Curves – continued
(Reference Data)

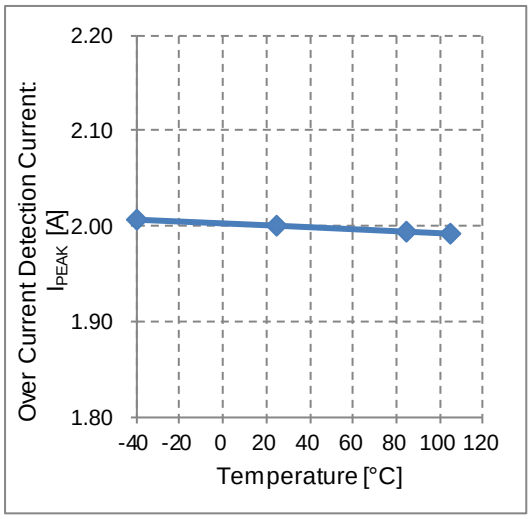

Figure 32. Over Current Detection Current vs Temperature

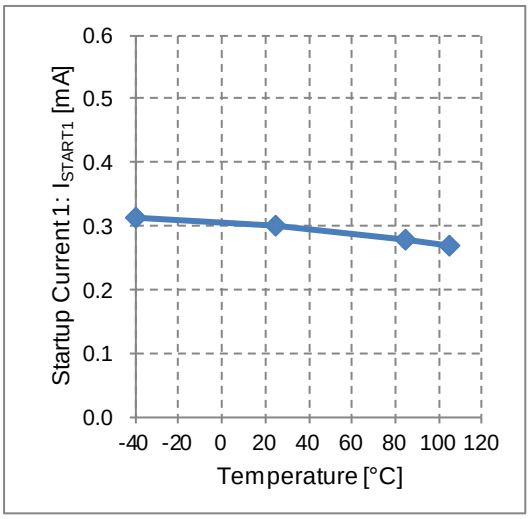

Figure 33. Startup Current 1 vs Temperature

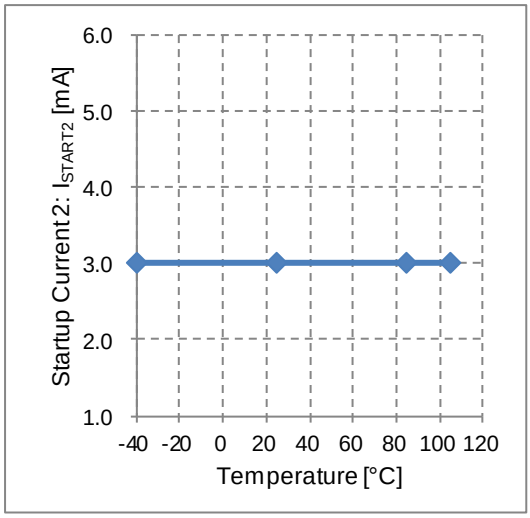

Figure 34. Startup Current 2 vs Temperature

© 2018 ROHM Co., Ltd. All rights reserved.

I/O Equivalence Circuit

7	DRAIN	6	DRAIN	–	–	5	VCC
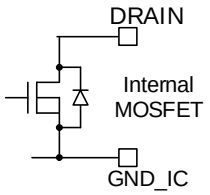		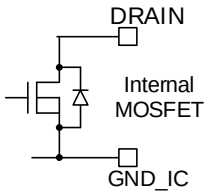		–		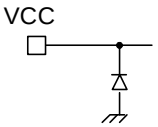	
1	N.C.	2	N.C.	3	GND_IC	4	N.C.
Non Connection		Non Connection		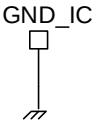		Non Connection	

© 2018 ROHM Co., Ltd. All rights reserved.

Operational Notes

1. **Reverse Connection of Power Supply**
   Connecting the power supply in reverse polarity can damage the IC. Take precautions against reverse polarity when connecting the power supply, such as mounting an external diode between the power supply and the IC's power supply pins.

2. **Power Supply Lines**
   Design the PCB layout pattern to provide low impedance supply lines. Furthermore, connect a capacitor to ground at all power supply pins. Consider the effect of temperature and aging on the capacitance value when using electrolytic capacitors.

3. **Ground Voltage**
   Ensure that no pins are at a voltage below that of the ground pin at any time, even during transient condition.

4. **Ground Wiring Pattern**
   When using both small-signal and large-current ground traces, the two ground traces should be routed separately but connected to a single ground at the reference point of the application board to avoid fluctuations in the small-signal ground caused by large currents. Also ensure that the ground traces of external components do not cause variations on the ground voltage. The ground lines must be as short and thick as possible to reduce line impedance.

5. **Recommended Operating Conditions**
   The function and operation of the IC are guaranteed within the range specified by the recommended operating conditions. The characteristic values are guaranteed only under the conditions of each item specified by the electrical characteristics.

6. **Inrush Current**
   When power is first supplied to the IC, it is possible that the internal logic may be unstable and inrush current may flow instantaneously due to the internal powering sequence and delays, especially if the IC has more than one power supply. Therefore, give special consideration to power coupling capacitance, power wiring, width of ground wiring, and routing of connections.

7. **Testing on Application Boards**
   When testing the IC on an application board, connecting a capacitor directly to a low-impedance output pin may subject the IC to stress. Always discharge capacitors completely after each process or step. The IC's power supply should always be turned off completely before connecting or removing it from the test setup during the inspection process. To prevent damage from static discharge, ground the IC during assembly and use similar precautions during transport and storage.

8. **Inter-pin Short and Mounting Errors**
   Ensure that the direction and position are correct when mounting the IC on the PCB. Incorrect mounting may result in damaging the IC. Avoid nearby pins being shorted to each other especially to ground, power supply and output pin. Inter-pin shorts could be due to many reasons such as metal particles, water droplets (in very humid environment) and unintentional solder bridge deposited in between pins during assembly to name a few.

9. **Unused Input Pins**
   Input pins of an IC are often connected to the gate of a MOS transistor. The gate has extremely high impedance and extremely low capacitance. If left unconnected, the electric field from the outside can easily charge it. The small charge acquired in this way is enough to produce a significant effect on the conduction through the transistor and cause unexpected operation of the IC. So unless otherwise specified, unused input pins should be connected to the power supply or ground line.

© 2018 ROHM Co., Ltd. All rights reserved.

Operational Notes – continued

10. Regarding the Input Pin of the IC

This IC contains P+ isolation and P substrate layers between adjacent elements in order to keep them isolated. P-N junctions are formed at the intersection of the P layers with the N layers of other elements, creating a parasitic diode or transistor. For example (refer to figure below):

When GND > Pin A and GND > Pin B, the P-N junction operates as a parasitic diode.
When GND > Pin B, the P-N junction operates as a parasitic transistor.

Parasitic diodes inevitably occur in the structure of the IC. The operation of parasitic diodes can result in mutual interference among circuits, operational faults, or physical damage. Therefore, conditions that cause these diodes to operate, such as applying a voltage less than the GND voltage to an input pin (and thus to the P substrate) should be avoided.

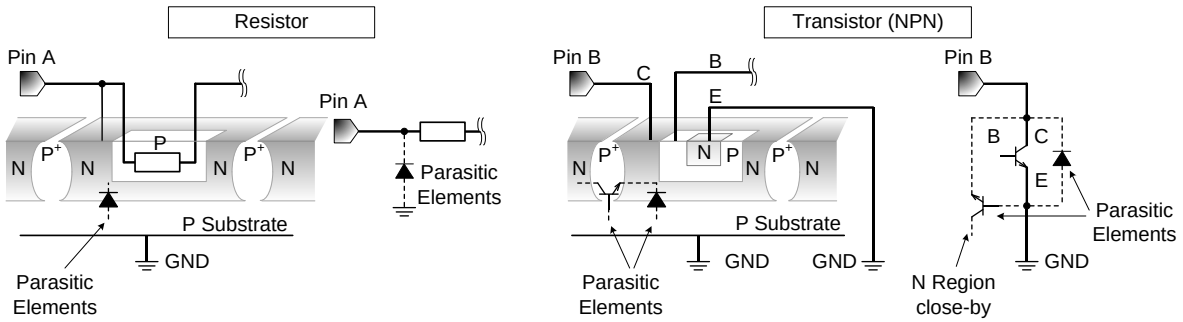

Figure 35. Example of IC Structure

11. Ceramic Capacitor

When using a ceramic capacitor, determine a capacitance value considering the change of capacitance with temperature and the decrease in nominal capacitance due to DC bias and others.

12. Thermal Shutdown Circuit (TSD)

This IC has a built-in thermal shutdown circuit that prevents heat damage to the IC. Normal operation should always be within the IC's maximum junction temperature rating. If however the rating is exceeded for a continued period, the junction temperature (Tj) will rise which will activate the TSD circuit that will turn OFF power output pins. When the Tj falls below the TSD threshold, the circuits are automatically restored to normal operation.
Note that the TSD circuit operates in a situation that exceeds the absolute maximum ratings and therefore, under no circumstances, should the TSD circuit be used in a set design or for any purpose other than protecting the IC from heat damage.

13. Over Current Protection Circuit (OCP)

This IC incorporates an integrated overcurrent protection circuit that is activated when the load is shorted. This protection circuit is effective in preventing damage due to sudden and unexpected incidents. However, the IC should not be used in applications characterized by continuous operation or transitioning of the protection circuit.

© 2018 ROHM Co., Ltd. All rights reserved.

Ordering Information

B M 2 P x x 1 X - Z

VCC Control Voltage
10: 10.00 V
12: 12.00 V
13: 13.00 V
14: 14.00 V
15: 15.00 V
16: 16.80 V
18: 18.00 V
20: 20.00 V
24: 24.80 V

Lineup

Part Number Marking	Orderable Part Number	VCC Control Voltage
BM2P101X	BM2P101X-Z	10.00
BM2P121X	BM2P121X-Z	12.00
BM2P131X	BM2P131X-Z	13.00
BM2P141X	BM2P141X-Z	14.00
BM2P151X	BM2P151X-Z	15.00
BM2P161X	BM2P161X-Z	16.80
BM2P181X	BM2P181X-Z	18.00
BM2P201X	BM2P201X-Z	20.00
BM2P241X	BM2P241X-Z	24.80

Making Diagram

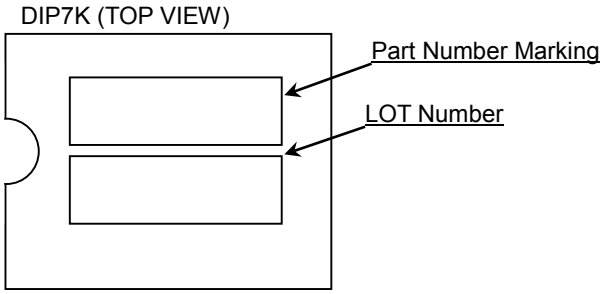

© 2018 ROHM Co., Ltd. All rights reserved.

Physical Dimension and Packing Information

Package Name	DIP7K

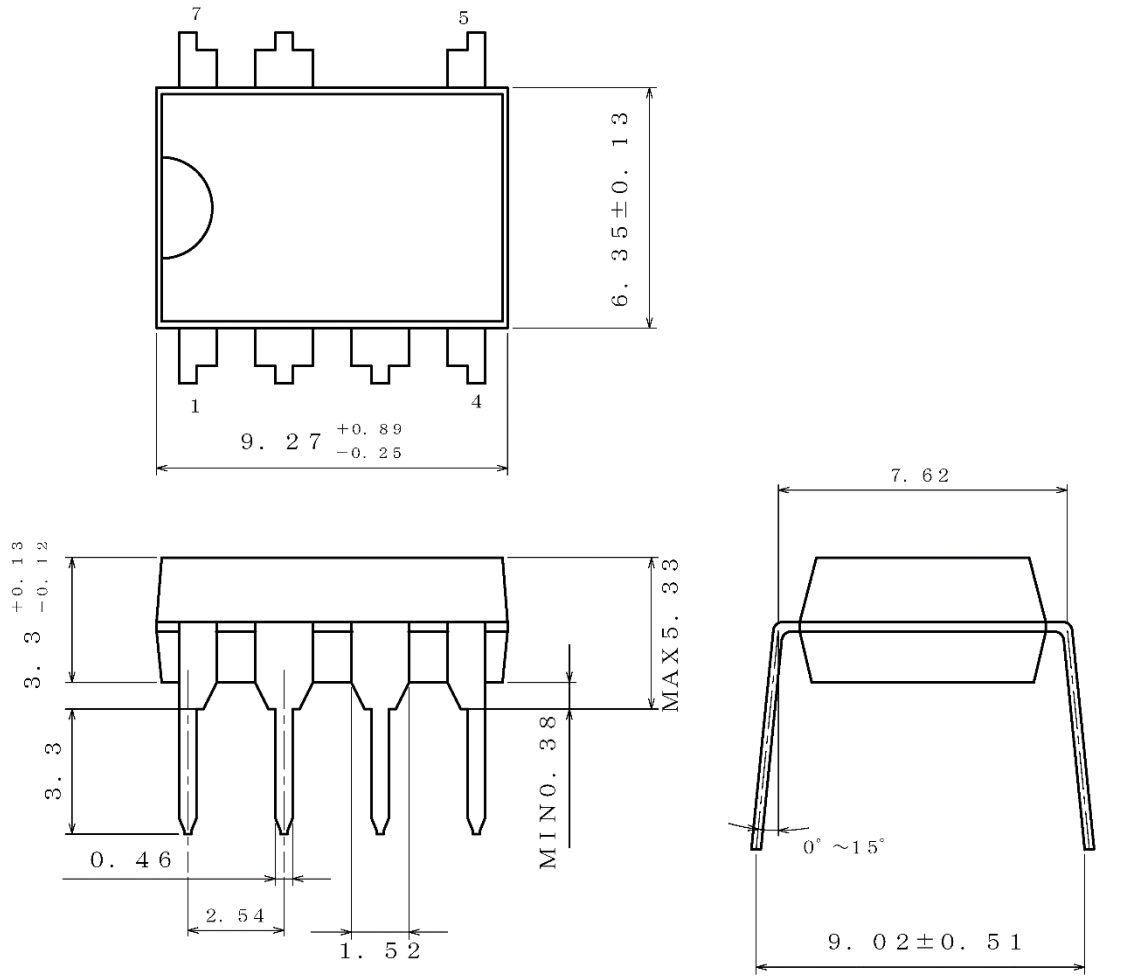

(UNIT:mm)
PKG:DIP7K
Drawing No. EX001-0076

< Container Information >

Container	Tube
Quantity	2000pcs
Direction of feed	Packing orientation is same in tube

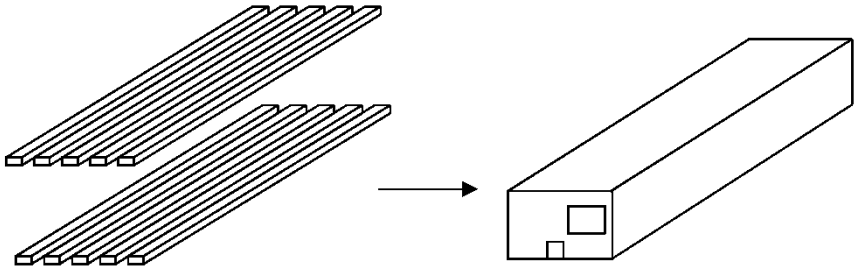

© 2018 ROHM Co., Ltd. All rights reserved.

Revision History

Date	Revision	Changes
14.May.2019	001	New release
18.Sep.2020	002	We deleted the words under development, because the development of all products was completed.

© 2018 ROHM Co., Ltd. All rights reserved.

Notice

Precaution on using ROHM Products

1. Our Products are designed and manufactured for application in ordinary electronic equipment (such as AV equipment, OA equipment, telecommunication equipment, home electronic appliances, amusement equipment, etc.). If you intend to use our Products in devices requiring extremely high reliability (such as medical equipment (Note 1), transport equipment, traffic equipment, aircraft/spacecraft, nuclear power controllers, fuel controllers, car equipment including car accessories, safety devices, etc.) and whose malfunction or failure may cause loss of human life, bodily injury or serious damage to property ("Specific Applications"), please consult with the ROHM sales representative in advance. Unless otherwise agreed in writing by ROHM in advance, ROHM shall not be in any way responsible or liable for any damages, expenses or losses incurred by you or third parties arising from the use of any ROHM's Products for Specific Applications.

(Note1) Medical Equipment Classification of the Specific Applications

JAPAN	USA	EU	CHINA
CLASSⅢ	CLASSⅢ	CLASSⅡb	CLASSⅢ
CLASSⅣ		CLASSⅢ	

2. ROHM designs and manufactures its Products subject to strict quality control system. However, semiconductor products can fail or malfunction at a certain rate. Please be sure to implement, at your own responsibilities, adequate safety measures including but not limited to fail-safe design against the physical injury, damage to any property, which a failure or malfunction of our Products may cause. The following are examples of safety measures:
   [a] Installation of protection circuits or other protective devices to improve system safety
   [b] Installation of redundant circuits to reduce the impact of single or multiple circuit failure

3. Our Products are designed and manufactured for use under standard conditions and not under any special or extraordinary environments or conditions, as exemplified below. Accordingly, ROHM shall not be in any way responsible or liable for any damages, expenses or losses arising from the use of any ROHM's Products under any special or extraordinary environments or conditions. If you intend to use our Products under any special or extraordinary environments or conditions (as exemplified below), your independent verification and confirmation of product performance, reliability, etc, prior to use, must be necessary:
   [a] Use of our Products in any types of liquid, including water, oils, chemicals, and organic solvents
   [b] Use of our Products outdoors or in places where the Products are exposed to direct sunlight or dust
   [c] Use of our Products in places where the Products are exposed to sea wind or corrosive gases, including Cl_2, H_2S, NH_3, SO_2, and NO_2
   [d] Use of our Products in places where the Products are exposed to static electricity or electromagnetic waves
   [e] Use of our Products in proximity to heat-producing components, plastic cords, or other flammable items
   [f] Sealing or coating our Products with resin or other coating materials
   [g] Use of our Products without cleaning residue of flux (Exclude cases where no-clean type fluxes is used. However, recommend sufficiently about the residue.) ; or Washing our Products by using water or water-soluble cleaning agents for cleaning residue after soldering
   [h] Use of the Products in places subject to dew condensation

4. The Products are not subject to radiation-proof design.

5. Please verify and confirm characteristics of the final or mounted products in using the Products.

6. In particular, if a transient load (a large amount of load applied in a short period of time, such as pulse, is applied, confirmation of performance characteristics after on-board mounting is strongly recommended. Avoid applying power exceeding normal rated power; exceeding the power rating under steady-state loading condition may negatively affect product performance and reliability.

7. De-rate Power Dissipation depending on ambient temperature. When used in sealed area, confirm that it is the use in the range that does not exceed the maximum junction temperature.

8. Confirm that operation temperature is within the specified range described in the product specification.

9. ROHM shall not be in any way responsible or liable for failure induced under deviant condition from what is defined in this document.

Precaution for Mounting / Circuit board design

1. When a highly active halogenous (chlorine, bromine, etc.) flux is used, the residue of flux may negatively affect product performance and reliability.

2. In principle, the reflow soldering method must be used on a surface-mount products, the flow soldering method must be used on a through hole mount products. If the flow soldering method is preferred on a surface-mount products, please consult with the ROHM representative in advance.

For details, please refer to ROHM Mounting specification

© 2015 ROHM Co., Ltd. All rights reserved.

Precautions Regarding Application Examples and External Circuits

1. If change is made to the constant of an external circuit, please allow a sufficient margin considering variations of the characteristics of the Products and external components, including transient characteristics, as well as static characteristics.

2. You agree that application notes, reference designs, and associated data and information contained in this document are presented only as guidance for Products use. Therefore, in case you use such information, you are solely responsible for it and you must exercise your own independent verification and judgment in the use of such information contained in this document. ROHM shall not be in any way responsible or liable for any damages, expenses or losses incurred by you or third parties arising from the use of such information.

Precaution for Electrostatic

This Product is electrostatic sensitive product, which may be damaged due to electrostatic discharge. Please take proper caution in your manufacturing process and storage so that voltage exceeding the Products maximum rating will not be applied to Products. Please take special care under dry condition (e.g. Grounding of human body / equipment / solder iron, isolation from charged objects, setting of Ionizer, friction prevention and temperature / humidity control).

Precaution for Storage / Transportation

1. Product performance and soldered connections may deteriorate if the Products are stored in the places where:
   [a] the Products are exposed to sea winds or corrosive gases, including Cl_2, H_2S, NH_3, SO_2, and NO_2
   [b] the temperature or humidity exceeds those recommended by ROHM
   [c] the Products are exposed to direct sunshine or condensation
   [d] the Products are exposed to high Electrostatic

2. Even under ROHM recommended storage condition, solderability of products out of recommended storage time period may be degraded. It is strongly recommended to confirm solderability before using Products of which storage time is exceeding the recommended storage time period.

3. Store / transport cartons in the correct direction, which is indicated on a carton with a symbol. Otherwise bent leads may occur due to excessive stress applied when dropping of a carton.

4. Use Products within the specified time after opening a humidity barrier bag. Baking is required before using Products of which storage time is exceeding the recommended storage time period.

Precaution for Product Label

A two-dimensional barcode printed on ROHM Products label is for ROHM's internal use only.

Precaution for Disposition

When disposing Products please dispose them properly using an authorized industry waste company.

Precaution for Foreign Exchange and Foreign Trade act

Since concerned goods might be fallen under listed items of export control prescribed by Foreign exchange and Foreign trade act, please consult with ROHM in case of export.

Precaution Regarding Intellectual Property Rights

1. All information and data including but not limited to application example contained in this document is for reference only. ROHM does not warrant that foregoing information or data will not infringe any intellectual property rights or any other rights of any third party regarding such information or data.

2. ROHM shall not have any obligations where the claims, actions or demands arising from the combination of the Products with other articles such as components, circuits, systems or external equipment (including software).

3. No license, expressly or implied, is granted hereby under any intellectual property rights or other rights of ROHM or any third parties with respect to the Products or the information contained in this document. Provided, however, that ROHM will not assert its intellectual property rights or other rights against you or your customers to the extent necessary to manufacture or sell products containing the Products, subject to the terms and conditions herein.

Other Precaution

1. This document may not be reprinted or reproduced, in whole or in part, without prior written consent of ROHM.

2. The Products may not be disassembled, converted, modified, reproduced or otherwise changed without prior written consent of ROHM.

3. In no event shall you use in any way whatsoever the Products and the related technical information contained in the Products or this document for any military purposes, including but not limited to, the development of mass-destruction weapons.

4. The proper names of companies or products described in this document are trademarks or registered trademarks of ROHM, its affiliated companies or third parties.

© 2015 ROHM Co., Ltd. All rights reserved.

General Precaution

1. Before you use our Products, you are requested to carefully read this document and fully understand its contents. ROHM shall not be in any way responsible or liable for failure, malfunction or accident arising from the use of any ROHM's Products against warning, caution or note contained in this document.

2. All information contained in this document is current as of the issuing date and subject to change without any prior notice. Before purchasing or using ROHM's Products, please confirm the latest information with a ROHM sales representative.

3. The information contained in this document is provided on an "as is" basis and ROHM does not warrant that all information contained in this document is accurate and/or error-free. ROHM shall not be in any way responsible or liable for any damages, expenses or losses incurred by you or third parties resulting from inaccuracy or errors of or concerning such information.

© 2015 ROHM Co., Ltd. All rights reserved.