Automotive IPD Series

2ch Low Side Switch IC
BM2LB150FJ-C

Features

- Built-in overcurrent limiting circuit(OCP)
- Built-in thermal shutdown circuit (TSD)
- Direct control enabled from CMOS logic IC, etc.
- Low On resistance $R_{DS(ON)}$ up to 150 mΩ (when V_{IN}=5V, I_D=0.5A, T_j=25°C)
- Monolithic power management IC with the control block (CMOS) and power MOS FET mounted on a single chip
- Surface mount package SOP-J8
- AEC-Q100 Qualified (Note 1)

(Note 1) Grade1

Product Summary

On-state resistance (T_j =25°C, Typ)	150mΩ
Overcurrent limit (T_j =25°C, Typ)	10A
Output clamp voltage (Min)	42V
Active clamp energy (T_j =25°C)	165mJ

Package W(Typ) x D(Typ) x H(Max)
SOP-J8 4.90mm x 6.00mm x 1.65mm



General Description

The BM2LB150FJ-C is an automotive 2ch low side switch IC, which has built-in overcurrent limiting circuit, thermal shutdown circuit, and overvoltage (active clamp) protection circuit.

Applications

2ch low side switch for driving resistive, inductive load, Capacitive load

Block Diagram

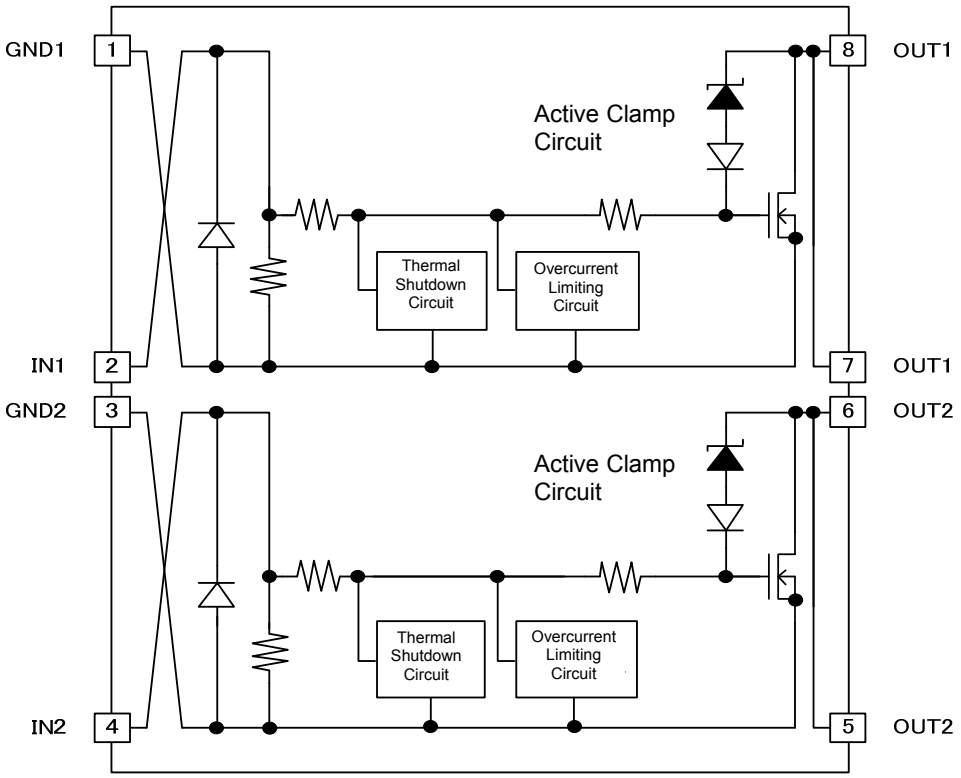

○Product structure: Silicon monolithic integrated circuit ○This product is not designed to protect it from radiation

© 2016 ROHM Co., Ltd. All rights reserved.

Pin Descriptions

Pin No.	Symbol	Function
1	GND1	GND pin1
2	IN1	Input pin1 (Note1)
3	GND2	GND pin2
4	IN2	Input pin2 (Note1)
5	OUT2	Output pin2
6	OUT2	Output pin2
7	OUT1	Output pin1
8	OUT1	Output pin1

(Note1) Input pin is used to internally connect a pull-down resistor.

Pin Configurations

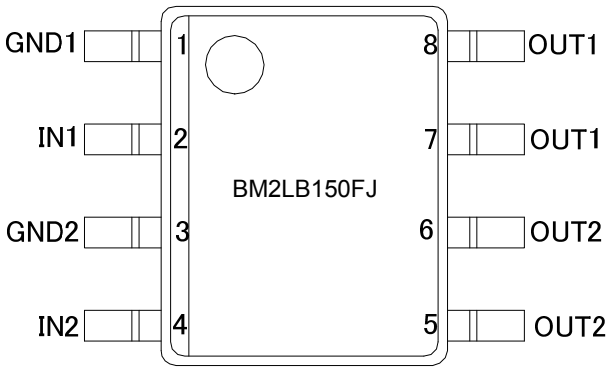

© 2016 ROHM Co., Ltd. All rights reserved.

Absolute Maximum Ratings (T_j =25°C)

Parameter	Symbol	Rating	Unit
Drain-Source voltage in output block	V_{DS}	-0.3 to +42 (Note1)	V
Input voltage	V_{IN}	-0.3 to +7	V
Output current (DC)	I_D	6.5(internally limited) (Note2)	A
Active clamp energy (Single pulse) $T_{j(start)}$ = 25°C (Note3)	$E_{AS(25°C)}$	165	mJ
Active clamp energy (Single pulse) $T_{j(start)}$ = 150°C (Note3) (Note4)	$E_{AS(150°C)}$	60	
Operating temperature range	T_j	-40 to +150	°C
Storage temperature range	T_{stg}	-55 to +150	°C
Maximum junction temperature	T_{jmax}	150	°C

(Note1) Please refer to P.12 “Operation Notes”, when is used at less than -0.3V.
(Note2) Internally limited by the overcurrent limiting circuit.
(Note3) Min Active clamp energy, using single non-repetitive pulse of 1.0A.

$$E_{AS} = \frac{1}{2} LI_{AR}^2 \cdot \left(1 - \frac{V_B}{V_B - V_{CL}}\right)$$

(Note4) Not 100% tested.

Thermal resistance

Parameter		Symbol	Rating	Unit
Power dissipation (Note5)	(1ch ON)	$P_{D(1)}$	1.47	W
	(2ch ON at once)	$P_{D(2)}$	2.00	W

(Note5) When mounted on a PCB (two-layer glass epoxy board measuring 76.2 × 114.3 [mm], 1.6 [mm] thick, with a copper foil area of 74.2 × 74.2 [mm])

Heat Dissipation Characteristic

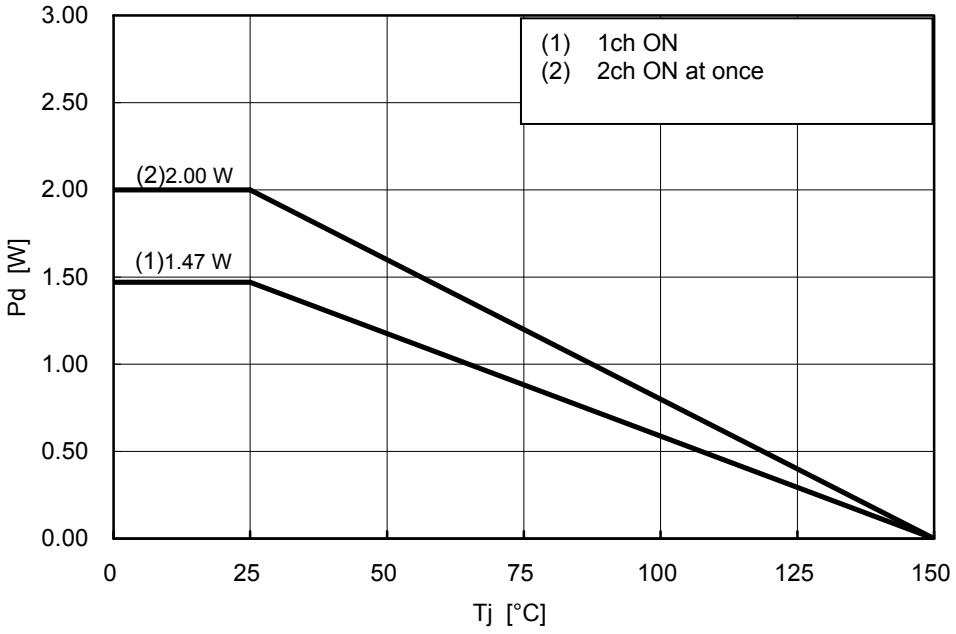

© 2016 ROHM Co., Ltd. All rights reserved.

Electrical Characteristics (Unless otherwise specified, −40°C≤T_j≤+150°C and V_{IN}=3.0V to 5.5V)

Parameter	Symbol	Limit			Unit	Conditions
		Min	Typ	Max		
Output clamp voltage	V_{CL}	42	48	54	V	V_{IN}=0V,I_D=1mA
On-state resistance 1 (at 25°C)	R_{ON1}	-	150	190	mΩ	V_{IN}=5V,I_D=0.5A,Tj=25°C
On-state resistance 1 (at 150°C)	R_{ON2}	-	260	320	mΩ	V_{IN}=5V,I_D=0.5A,Tj=150°C
On-state resistance 2 (at 25°C)	R_{ON3}	-	200	250	mΩ	V_{IN}=3V,I_D=0.5A, Tj=25°C
On-state resistance 2 (at 150°C)	R_{ON4}	-	340	420	mΩ	V_{IN}=3V,I_D=0.5A,Tj=150°C
Leakage current (at 25°C)	V_{IL1}	-	0	4	μA	V_{IN}=0V,V_{DS}=18V,Tj=25°C
Leakage current (at 150°C)	V_{IL_2}	-	2	25	μA	V_{IN}=0V,V_{DS}=18V,Tj=150°C
Turn-ON time	t_{ON}	-	-	80	μs	V_{IN}=0V/5V, R_L=15Ω, V_B=12V, Tj=25°C
Turn-OFF time	t_{OFF}	-	-	80	μs	V_{IN}=0V/5V, R_L=15Ω, V_B=12V, Tj=25°C
Slew rate on	SR_{ON}	-	0.5	1.0	V/μs	V_{IN}=0V/5V, R_L=15Ω, V_B=12V, Tj=25°C
Slew rate off	SR_{OFF}	-	1.0	2.0	V/μs	V_{IN}=0V/5V, R_L=15Ω, V_B=12V, Tj=25°C
Input threshold voltage	V_{TH}	1.1	-	2.7	V	I_D=1mA
High-level input current	I_{INH1}	-	150	300	μA	V_{IN}=5V
High-level input current (in abnormal operation)	I_{INH2}	-	250	450	μA	V_{IN}=5V
Low-level input current	I_{INL}	-10	0	10	μA	V_{IN}=0V
Overcurrent detection current	I_{OCP}	6.5	10.0	13.5	A	V_{IN}=5V, T_j=25°C
TSD detection temperature(Note1)	T_{jd}	150	175	-	°C	V_{IN}=5V
TSD release temperature(Note1)	T_{jr}	130	-	-	°C	V_{IN}=5V
TSD hysteresis(Note1)	ΔT_{jd}	-	15	-	°C	V_{IN}=5V

(Note1) Not 100% tested.

Terms

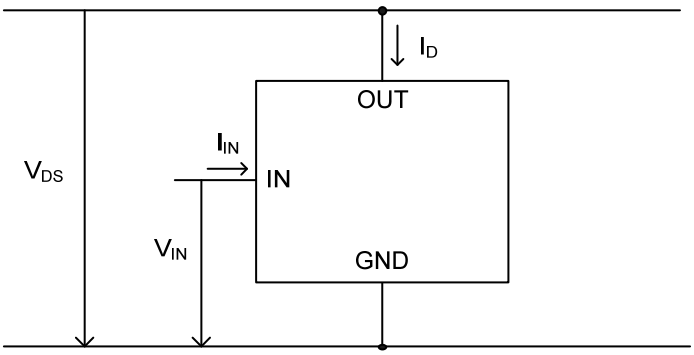

Figure 1. Terms

© 2016 ROHM Co., Ltd. All rights reserved.

Measuring circuit

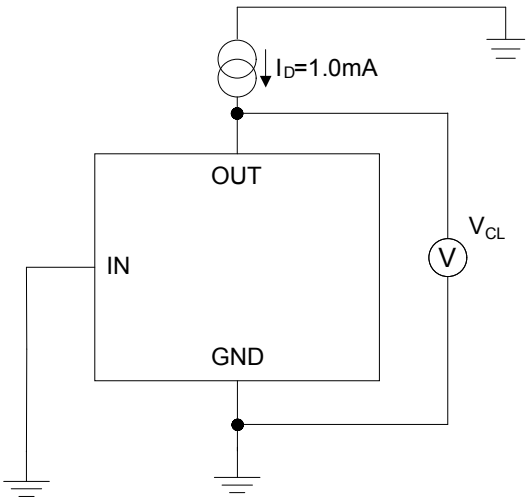

Figure 2. Output clamp voltage measuring circuit

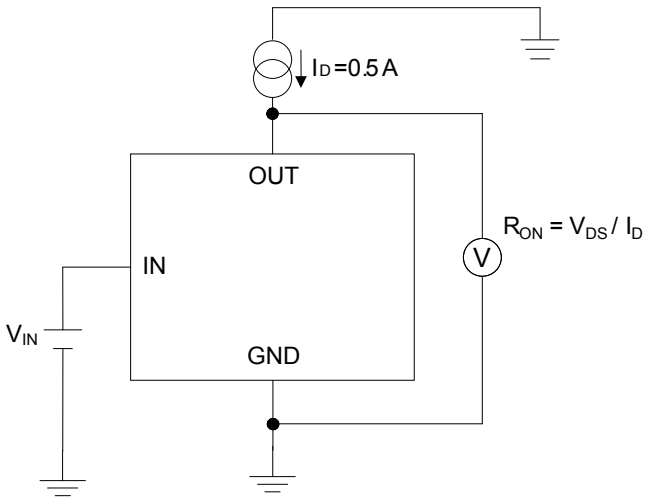

Figure 3. On-state resistance measuring circuit

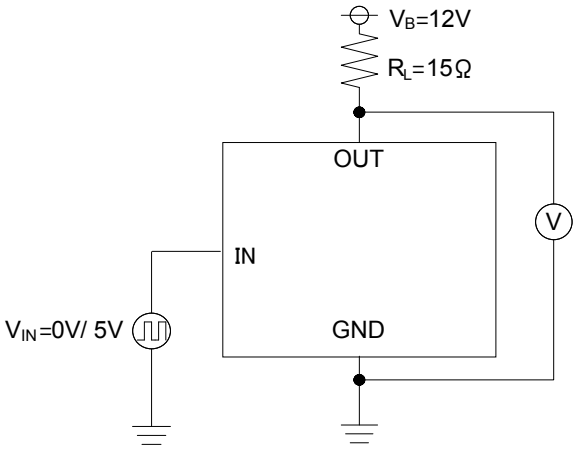

Figure 4. t_{ON} · t_{OFF} measuring circuit

I/O Pin Truth Table

Operating Status	Input Signal	Output Level	Output Status
Normal	H	L	ON
	L	H	OFF
Overcurrent	H	Clamp	Current Limiting
	L	H	OFF
Overheat	H	H	OFF
	L	H	OFF

© 2016 ROHM Co., Ltd. All rights reserved.

Typical Performance Curves (Unless otherwise specified, Tj=25°C, V_{IN}=5.0V)

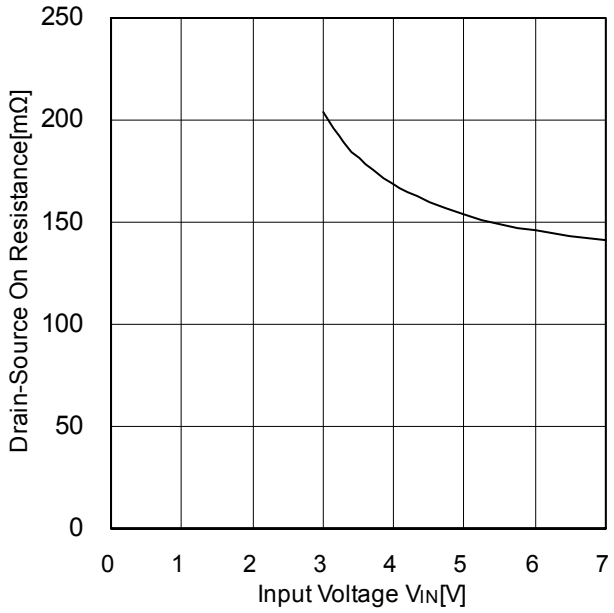

Figure 5. On-state Resistance Characteristics
[Input Voltage Characteristics]

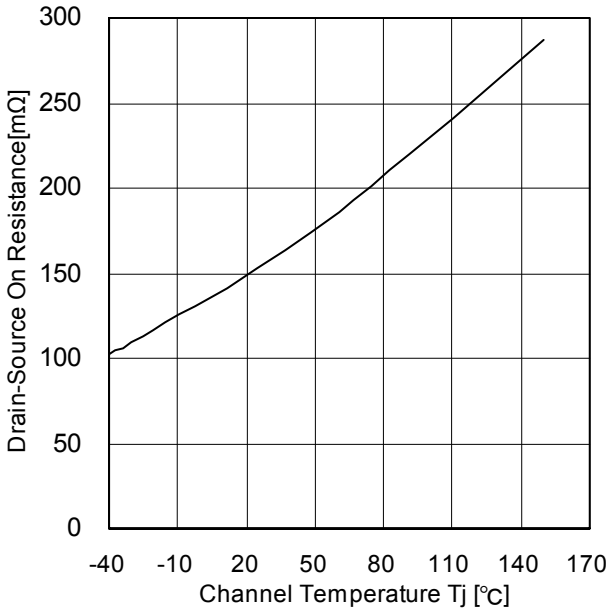

Figure 6. On-state Resistance Characteristics
[Temperature Characteristics]

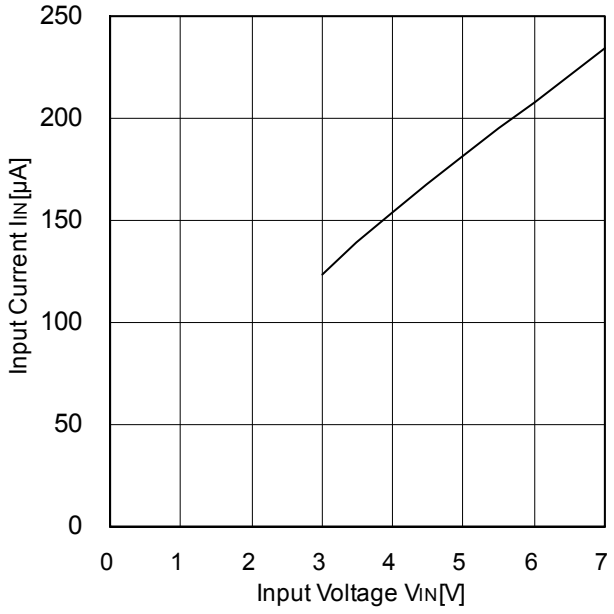

Figure 7. Input Current Characteristics
[Input Voltage Characteristics]

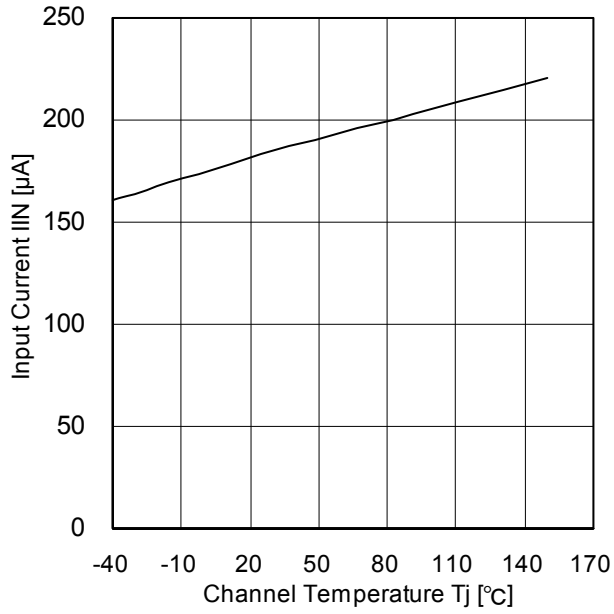

Figure 8. Input Current Characteristics
[Temperature Characteristics]

© 2016 ROHM Co., Ltd. All rights reserved.

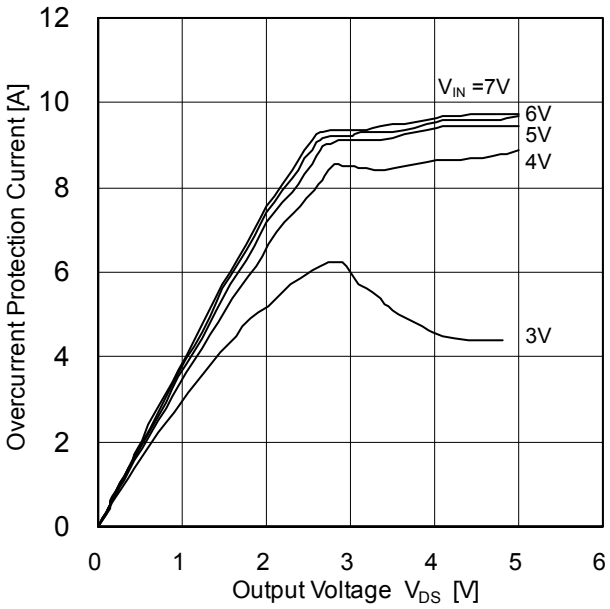

Figure 9. Overcurrent Detection Current Characteristics
[Input Voltage Characteristics]

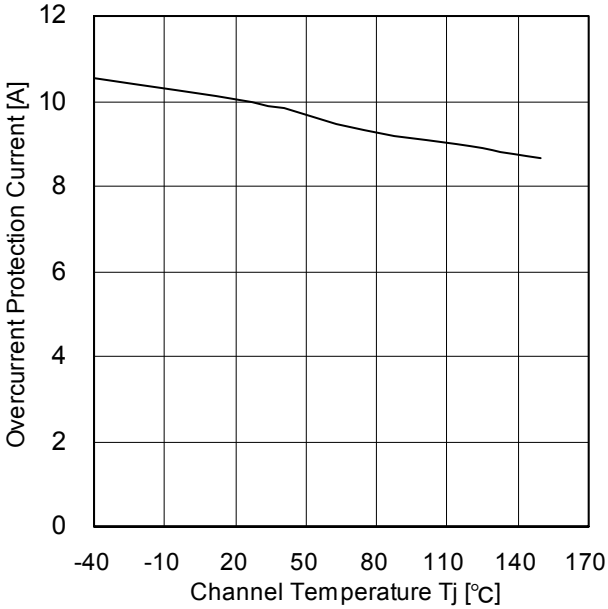

Figure 10. Overcurrent Detection Current Characteristics
[Temperature Characteristics]

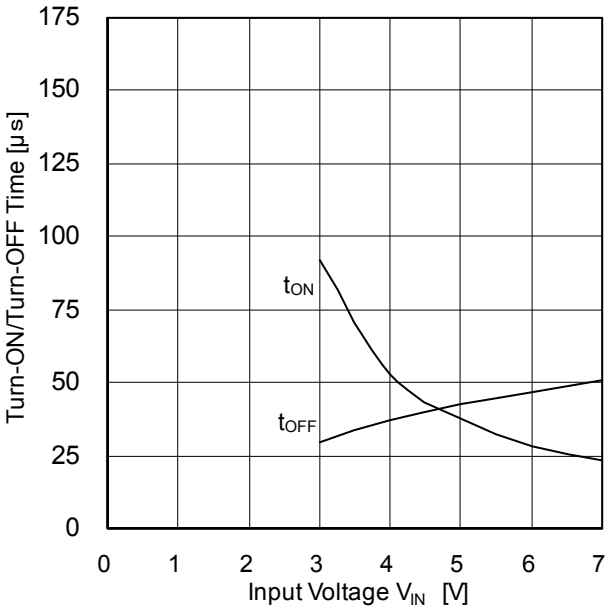

Figure 11. Turn-ON/Turn-OFF Time Characteristics
[Input Voltage Characteristics]

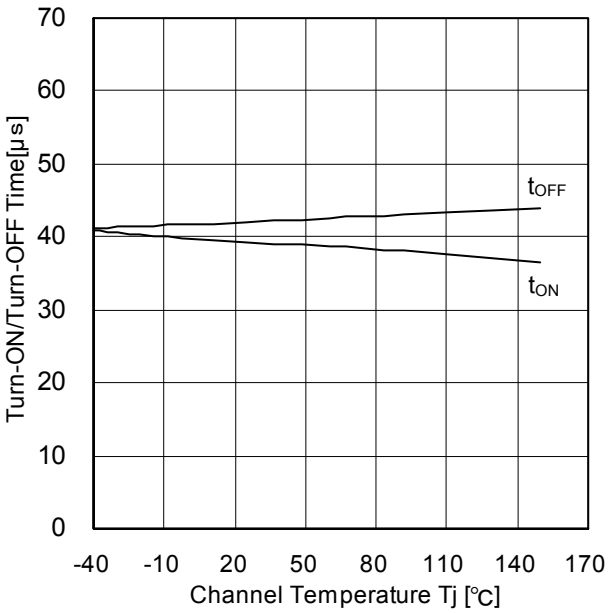

Figure 12. Turn-ON/Turn-OFF Time Characteristics
[Temperature Characteristics]

© 2016 ROHM Co., Ltd. All rights reserved.

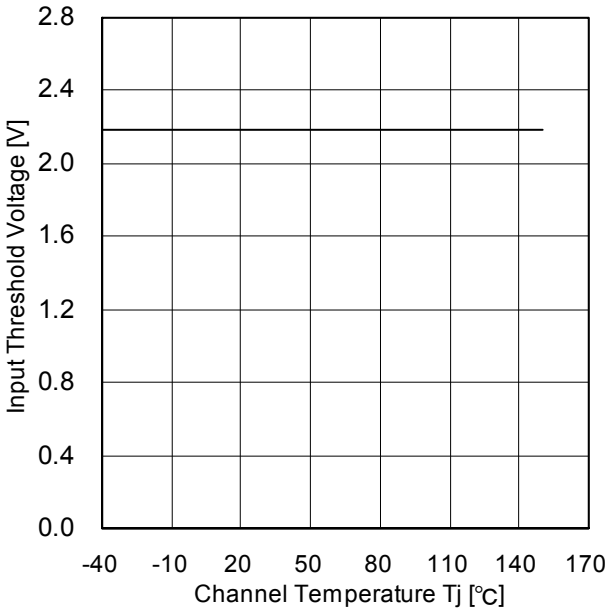

Figure 13. Input Threshold Voltage Characteristics
[Temperature Characteristics]

Timing Chart

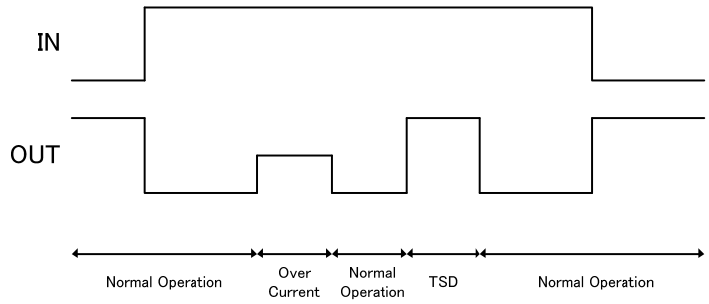

Figure 14. Behavior Sequence

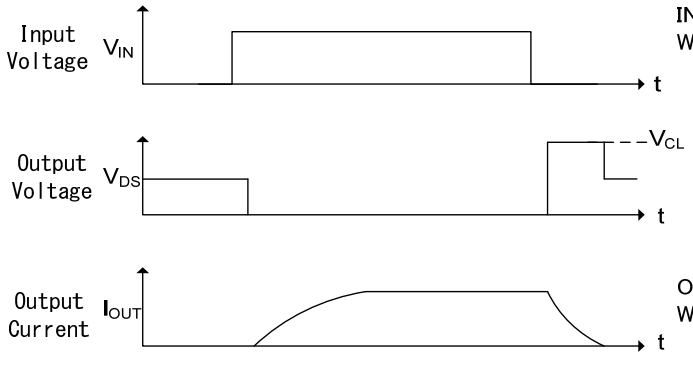

Figure 15. Inductive Load Operation

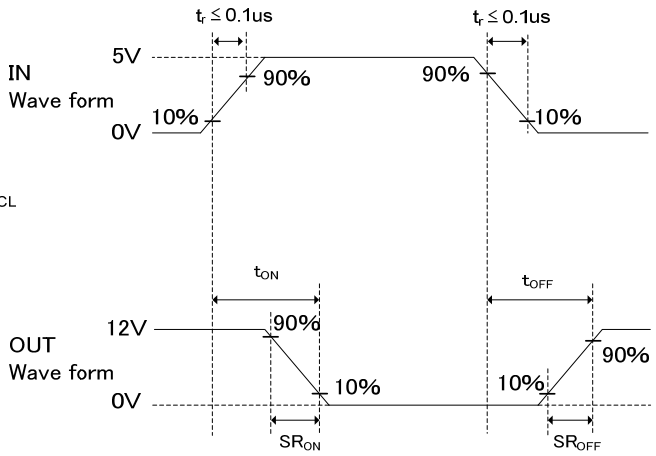

Figure 16. Switching Time

© 2016 ROHM Co., Ltd. All rights reserved.

Ordering Information

B	M	2	L	B	1	5	0	F	J	-	CE2

Package
FJ：SOP-J8

Packaging and forming specification
C: High-reliability product
E2: Embossed tape and reel

Marking Diagram

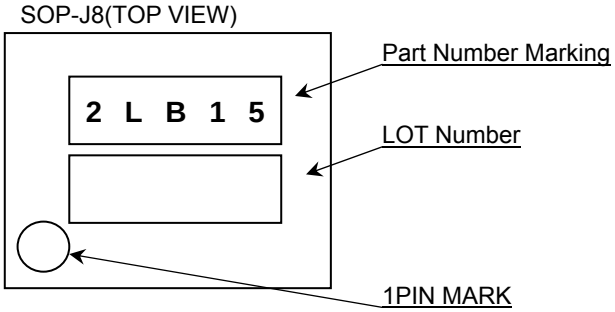

© 2016 ROHM Co., Ltd. All rights reserved.

Physical Dimension Tape and Reel Information

Package Name	SOP-J8

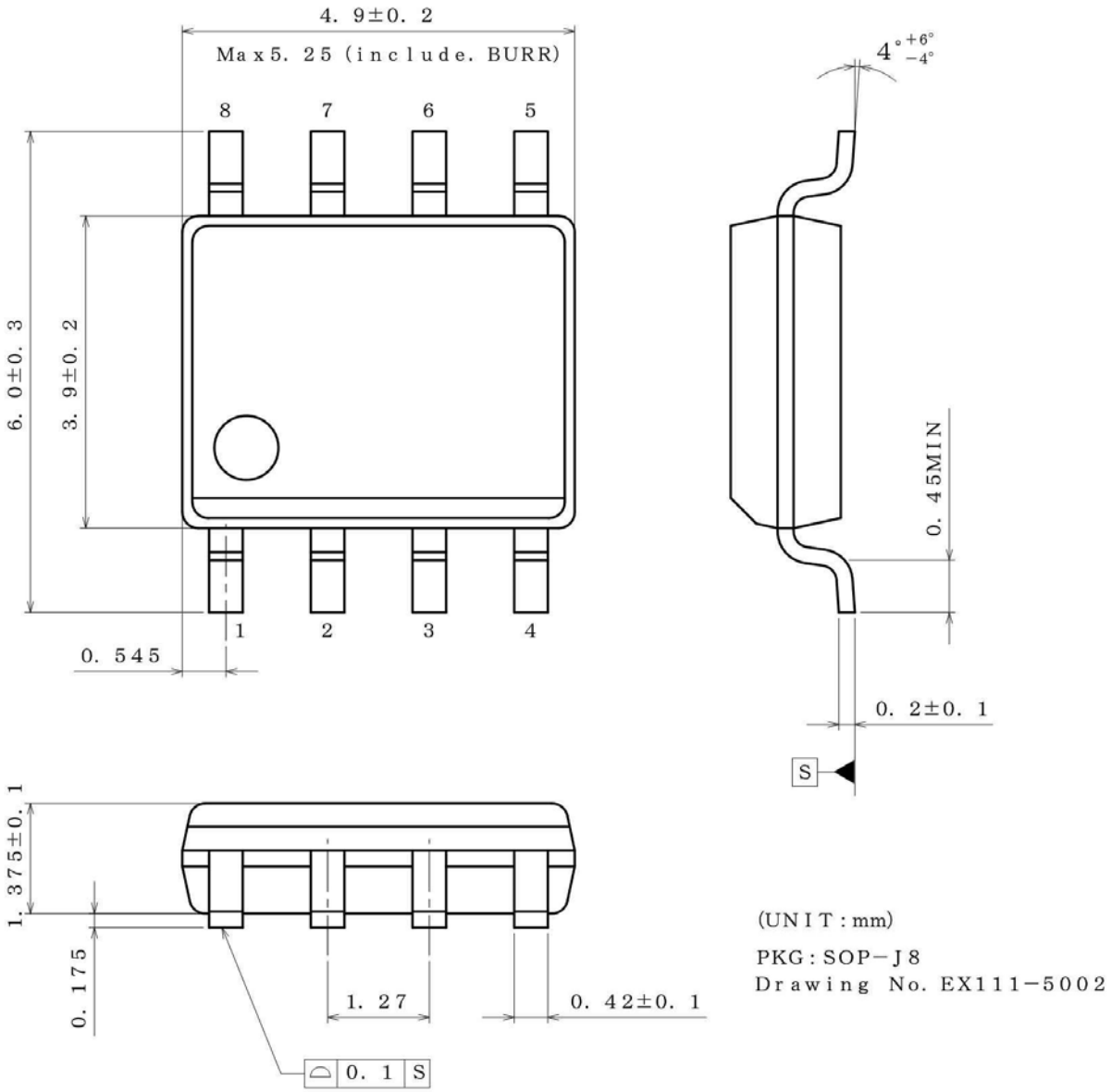

<Packaging Specification>

Packaging style	**Embossed carrier tape**
Quantity packaged	2500pcs
Direction of feed	E2 (Pin 1 should come to the top left when you hold the reel with your left hand and feed the tape with your right hand.)

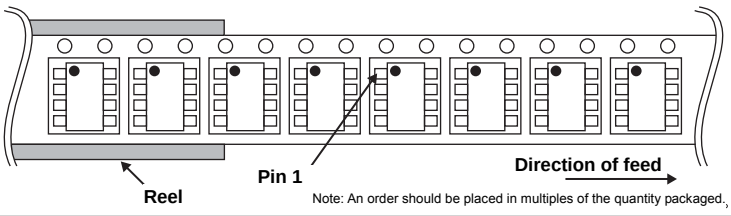

Note: An order should be placed in multiples of the quantity packaged.

© 2016 ROHM Co., Ltd. All rights reserved.

Operational Notes

1. Grounding Interconnection Pattern

When a small-signal ground and a high-current ground are used, it is recommended to isolate the high-current grounding interconnection pattern and the small-signal grounding interconnection pattern and establish a single ground at the reference point of a set so that voltage changes due to the resistance and high current of patterned interconnects will not cause any changes in the small-signal ground voltage. Pay careful attention to prevent changes in the interconnection pattern of ground for external components.
The ground lines must be as short and thick as possible to reduce line impedance.

2. Thermal Design

Use a thermal design that allows for a sufficient margin by taking into account the permissible power dissipation (Pd) in actual operating conditions.

3. Absolute Maximum Ratings

Operating the IC over the absolute maximum ratings may damage the IC. The damage can either be a short circuit between pins or an open circuit between pins and the internal circuitry. Therefore, it is important to consider circuit protection measures, such as adding a fuse, in case the IC is operated over the absolute maximum ratings.

4. Inspections on Set Board

If a capacitor is connected to a low-impedance pin in order to conduct inspections of the IC on a set board, stress may apply to the IC. To avoid that, be sure to discharge the capacitor in each process. In addition, to connect or disconnect the IC to or from a jig in the testing process, be sure to turn OFF the power supply prior to connecting the IC, and disconnect it from the jig only after turning OFF the power supply. Furthermore, in order to protect the IC from static electricity, establish a ground for the IC assembly process and pay utmost attention to transport and store the IC.

5. Inter-pin Short and Mounting Errors

Ensure that the direction and position are correct when mounting the IC on the PCB. Incorrect mounting may result in damaging the IC. Avoid nearby pins being shorted to each other especially to ground, power supply and output pin. Inter-pin shorts could be due to many reasons such as metal particles, water droplets (in very humid environment) and unintentional solder bridge deposited in between pins during assembly to name a few.

6. Ceramic Capacitor

When using a ceramic capacitor, determine the dielectric constant considering the change of capacitance with temperature and the decrease in nominal capacitance due to DC bias and others.

7. Thermal Shutdown Circuit

This IC has a built-in thermal shutdown circuit as an overheat-protection measure. The circuit is designed to turn OFF output when the temperature of the IC chip exceeds 175°C (Typ) and return the IC to the normal operation when the temperature falls below 150°C (Typ).
The thermal shutdown circuit is a circuit absolutely intended to protect the IC from thermal runaway, not intended to protect or guarantee the IC. Consequently, do not operate the IC based on the subsequent continuous use or operation of the circuit.

8. Overcurrent Limiting Circuit

This IC incorporates an integrated overcurrent protection circuit that is activated when the load is shorted. This protection circuit is effective in preventing damage due to sudden and unexpected incidents. However, the IC should not be used in applications characterized by continuous operation or transitioning of the protection circuit.

9. Overvoltage (Active Clamp) Protection Function

This IC has a built-in overvoltage protection function in order for the IC to absorb counter-electromotive force energy generated when inductive load is turned OFF. Since the input voltage is clamped at 0V when the active clamp circuit is activated, the thermal shutdown circuit is disabled. Design a thermal solution so that the chip temperature will definitely come to less than 150°C.

10. Counter-electromotive Force

Fully ensure that the counter-electromotive force presents no problems in the operation or the IC.

© 2016 ROHM Co., Ltd. All rights reserved.

Operational Notes – continued

11. Negative Current of Output

When supply a negative current from DRAIN terminal in the state that supplied the voltage to IN terminal. The current pass from IN terminal to DRAIN terminal through a parasitic transistor and voltage of IN terminal descend as shown in figure.17 and figure.18.

As shown in figure.17 power MOS is turned on, set the DRAIN terminal is more than -0.3V. Because a negative current may be passed to DRAIN terminal from a power supply of the connection of the IN terminal (MCU, and so on).

As shown in figure.18 power MOS is turned off, add a restriction resistance higher than 330 Ω to IN terminal. Because a negative current may be passed to DRAIN terminal from GND of the connection of the IN terminal.

The restriction resistance value, set up in consideration of the voltage descent caused by the IN terminal current.

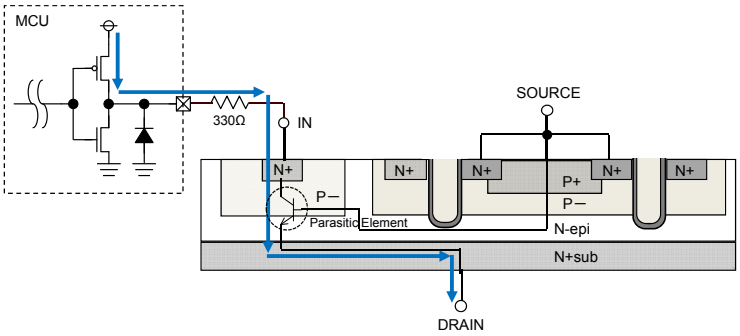

Figure 17. Negative current pass(when power MOS is turned on)

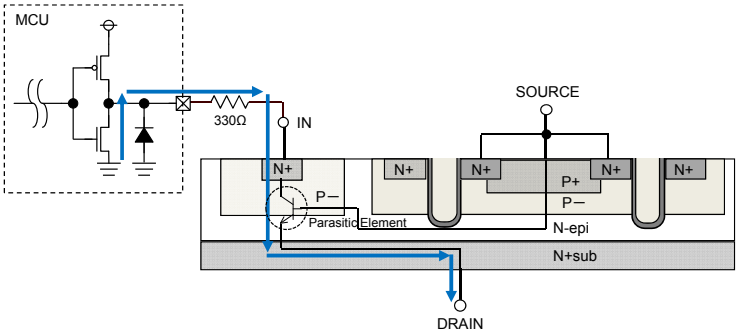

Figure 18. Negative current pass(when power MOS is turned off)

© 2016 ROHM Co., Ltd. All rights reserved.

Revision History

Date	Revision	Changes
09.Jan.2014	001	New Release
25.Dec.2015	002	・General Description “BM2LB180” → “BM2LB150” ・Ordering Information is change. “BM2LB180” → “BM2LB150”
01.Aug.2016	003	P.1 “Features” Add “AECQ100-012 Grade” P.1 “Applications” Add “Capacitive load” P.1 “Package” Add “W(Typ) x D(Typ) x H(Max)” P.4 ”Electrical Characteristics” Turn-ON(OFF) time UNIT change P.12 “Operational Notes” Modify some sentence.

© 2016 ROHM Co., Ltd. All rights reserved.

Notice

Precaution on using ROHM Products

1. If you intend to use our Products in devices requiring extremely high reliability (such as medical equipment (Note 1), aircraft/spacecraft, nuclear power controllers, etc.) and whose malfunction or failure may cause loss of human life, bodily injury or serious damage to property ("Specific Applications"), please consult with the ROHM sales representative in advance. Unless otherwise agreed in writing by ROHM in advance, ROHM shall not be in any way responsible or liable for any damages, expenses or losses incurred by you or third parties arising from the use of any ROHM's Products for Specific Applications.

(Note1) Medical Equipment Classification of the Specific Applications

JAPAN	USA	EU	CHINA
CLASSⅢ	CLASSⅢ	CLASSⅡb	CLASSⅢ
CLASSⅣ		CLASSⅢ	

2. ROHM designs and manufactures its Products subject to strict quality control system. However, semiconductor products can fail or malfunction at a certain rate. Please be sure to implement, at your own responsibilities, adequate safety measures including but not limited to fail-safe design against the physical injury, damage to any property, which a failure or malfunction of our Products may cause. The following are examples of safety measures:
   [a] Installation of protection circuits or other protective devices to improve system safety
   [b] Installation of redundant circuits to reduce the impact of single or multiple circuit failure

3. Our Products are not designed under any special or extraordinary environments or conditions, as exemplified below. Accordingly, ROHM shall not be in any way responsible or liable for any damages, expenses or losses arising from the use of any ROHM's Products under any special or extraordinary environments or conditions. If you intend to use our Products under any special or extraordinary environments or conditions (as exemplified below), your independent verification and confirmation of product performance, reliability, etc, prior to use, must be necessary:
   [a] Use of our Products in any types of liquid, including water, oils, chemicals, and organic solvents
   [b] Use of our Products outdoors or in places where the Products are exposed to direct sunlight or dust
   [c] Use of our Products in places where the Products are exposed to sea wind or corrosive gases, including Cl_2, H_2S, NH_3, SO_2, and NO_2
   [d] Use of our Products in places where the Products are exposed to static electricity or electromagnetic waves
   [e] Use of our Products in proximity to heat-producing components, plastic cords, or other flammable items
   [f] Sealing or coating our Products with resin or other coating materials
   [g] Use of our Products without cleaning residue of flux (even if you use no-clean type fluxes, cleaning residue of flux is recommended); or Washing our Products by using water or water-soluble cleaning agents for cleaning residue after soldering
   [h] Use of the Products in places subject to dew condensation

4. The Products are not subject to radiation-proof design.

5. Please verify and confirm characteristics of the final or mounted products in using the Products.

6. In particular, if a transient load (a large amount of load applied in a short period of time, such as pulse. is applied, confirmation of performance characteristics after on-board mounting is strongly recommended. Avoid applying power exceeding normal rated power; exceeding the power rating under steady-state loading condition may negatively affect product performance and reliability.

7. De-rate Power Dissipation depending on ambient temperature. When used in sealed area, confirm that it is the use in the range that does not exceed the maximum junction temperature.

8. Confirm that operation temperature is within the specified range described in the product specification.

9. ROHM shall not be in any way responsible or liable for failure induced under deviant condition from what is defined in this document.

Precaution for Mounting / Circuit board design

1. When a highly active halogenous (chlorine, bromine, etc.) flux is used, the residue of flux may negatively affect product performance and reliability.

2. In principle, the reflow soldering method must be used on a surface-mount products, the flow soldering method must be used on a through hole mount products. If the flow soldering method is preferred on a surface-mount products, please consult with the ROHM representative in advance.

For details, please refer to ROHM Mounting specification

© 2015 ROHM Co., Ltd. All rights reserved.

Precautions Regarding Application Examples and External Circuits

1. If change is made to the constant of an external circuit, please allow a sufficient margin considering variations of the characteristics of the Products and external components, including transient characteristics, as well as static characteristics.

2. You agree that application notes, reference designs, and associated data and information contained in this document are presented only as guidance for Products use. Therefore, in case you use such information, you are solely responsible for it and you must exercise your own independent verification and judgment in the use of such information contained in this document. ROHM shall not be in any way responsible or liable for any damages, expenses or losses incurred by you or third parties arising from the use of such information.

Precaution for Electrostatic

This Product is electrostatic sensitive product, which may be damaged due to electrostatic discharge. Please take proper caution in your manufacturing process and storage so that voltage exceeding the Products maximum rating will not be applied to Products. Please take special care under dry condition (e.g. Grounding of human body / equipment / solder iron, isolation from charged objects, setting of Ionizer, friction prevention and temperature / humidity control).

Precaution for Storage / Transportation

1. Product performance and soldered connections may deteriorate if the Products are stored in the places where:
   [a] the Products are exposed to sea winds or corrosive gases, including Cl2, H2S, NH3, SO2, and NO2
   [b] the temperature or humidity exceeds those recommended by ROHM
   [c] the Products are exposed to direct sunshine or condensation
   [d] the Products are exposed to high Electrostatic

2. Even under ROHM recommended storage condition, solderability of products out of recommended storage time period may be degraded. It is strongly recommended to confirm solderability before using Products of which storage time is exceeding the recommended storage time period.

3. Store / transport cartons in the correct direction, which is indicated on a carton with a symbol. Otherwise bent leads may occur due to excessive stress applied when dropping of a carton.

4. Use Products within the specified time after opening a humidity barrier bag. Baking is required before using Products of which storage time is exceeding the recommended storage time period.

Precaution for Product Label

A two-dimensional barcode printed on ROHM Products label is for ROHM's internal use only.

Precaution for Disposition

When disposing Products please dispose them properly using an authorized industry waste company.

Precaution for Foreign Exchange and Foreign Trade act

Since concerned goods might be fallen under listed items of export control prescribed by Foreign exchange and Foreign trade act, please consult with ROHM in case of export.

Precaution Regarding Intellectual Property Rights

1. All information and data including but not limited to application example contained in this document is for reference only. ROHM does not warrant that foregoing information or data will not infringe any intellectual property rights or any other rights of any third party regarding such information or data.

2. ROHM shall not have any obligations where the claims, actions or demands arising from the combination of the Products with other articles such as components, circuits, systems or external equipment (including software).

3. No license, expressly or implied, is granted hereby under any intellectual property rights or other rights of ROHM or any third parties with respect to the Products or the information contained in this document. Provided, however, that ROHM will not assert its intellectual property rights or other rights against you or your customers to the extent necessary to manufacture or sell products containing the Products, subject to the terms and conditions herein.

Other Precaution

1. This document may not be reprinted or reproduced, in whole or in part, without prior written consent of ROHM.

2. The Products may not be disassembled, converted, modified, reproduced or otherwise changed without prior written consent of ROHM.

3. In no event shall you use in any way whatsoever the Products and the related technical information contained in the Products or this document for any military purposes, including but not limited to, the development of mass-destruction weapons.

4. The proper names of companies or products described in this document are trademarks or registered trademarks of ROHM, its affiliated companies or third parties.

© 2015 ROHM Co., Ltd. All rights reserved.

General Precaution

1. Before you use our Products, you are requested to carefully read this document and fully understand its contents. ROHM shall not be in any way responsible or liable for failure, malfunction or accident arising from the use of any ROHM's Products against warning, caution or note contained in this document.

2. All information contained in this document is current as of the issuing date and subject to change without any prior notice. Before purchasing or using ROHM's Products, please confirm the latest information with a ROHM sales representative.

3. The information contained in this document is provided on an "as is" basis and ROHM does not warrant that all information contained in this document is accurate and/or error-free. ROHM shall not be in any way responsible or liable for any damages, expenses or losses incurred by you or third parties resulting from inaccuracy or errors of or concerning such information.

© 2015 ROHM Co., Ltd. All rights reserved.

BM2LB150FJ-C - Web Page

Buy

Distribution Inventory

Part Number	BM2LB150FJ-C
Package	SOP-J8
Unit Quantity	2500
Minimum Package Quantity	2500
Packing Type	Taping
Constitution Materials List	inquiry
RoHS	Yes