BLC6G22-100; BLC6G22LS-100

UHF power LDMOS transistor

Rev. 01 — 30 January 2006 Objective data sheet

1. Product profile

1.1 General description

100 W LDMOS power transistor for base station applications at frequencies from 2000 MHz to 2200 MHz.

Table 1: Typical performance

RF performance at T_{case} = 25 °C in a common source class-AB production test circuit.

Mode of operation	f (MHz)	V_{DS} (V)	$P_{L(AV)}$ (W)	G_p (dB)	η_D (%)	IMD3 (dBc)	ACPR (dBc)
2-carrier W-CDMA	2110 to 2170	28	25	18	32	–37 [1]	–40 [1]

[1] Test signal: 3GPP; test model 1; 64 DPCH; PAR = 7 dB at 0.01 % probability on CCDF per carrier; carrier spacing 10 MHz.

CAUTION



This device is sensitive to ElectroStatic Discharge (ESD). Therefore care should be taken during transport and handling.

1.2 Features

- Typical 2-carrier W-CDMA performance at frequencies of 2110 MHz and 2170 MHz, a supply voltage of 28 V and an I_{Dq} of 950 mA:
  - Output power = 25 W (AV)
  - Gain = 18 dB
  - Efficiency = 32 %
  - IMD3 = –37 dBc
  - ACPR = –40 dBc
- Easy power control
- Integrated ESD protection
- Excellent ruggedness
- High efficiency
- Excellent thermal stability
- Designed for broadband operation (2000 MHz to 2200 MHz)
- Internally matched for ease of use

PHILIPS

1.3 Applications

- RF power amplifiers for W-CDMA base stations and multi carrier applications in the 2000 MHz to 2200 MHz frequency range.

2. Pinning information

Table 2: Pinning

Pin	Description		Simplified outline	Symbol
BLC6G22-100 (SOT895-1)				
1	drain		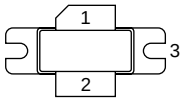	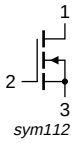 sym112
2	gate			
3	source	[1]		
BLC6G22LS-100 (SOT896-1)				
1	drain		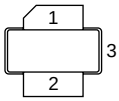	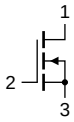 sym112
2	gate			
3	source	[1]		

[1] Connected to flange

3. Ordering information

Table 3: Ordering information

Type number	Package		
	Name	Description	Version
BLC6G22-100	-	plastic flanged cavity package; 2 mounting slots; 2 leads	SOT895-1
BLC6G22LS-100	-	plastic earless flanged cavity package; 2 leads	SOT896-1

4. Limiting values

Table 4: Limiting values

In accordance with the Absolute Maximum Rating System (IEC 60134).

Symbol	Parameter	Conditions	Min	Max	Unit
V_{DS}	drain-source voltage		-	65	V
V_{GS}	gate-source voltage		–0.5	+13	V
I_D	drain current		-	**<tbd>**	A
T_{stg}	storage temperature		–65	+150	°C
T_j	junction temperature		-	225	°C

© Koninklijke Philips Electronics N.V. 2006. All rights reserved.

5. Thermal characteristics

Table 5: Thermal characteristics

Symbol	Parameter	Conditions	Type	Min	Typ	Max	Unit
$R_{th(j\text{-}case)}$	thermal resistance from junction to case	T_{case} = 80 °C; P_L = 25 W	BLC6G22-100	<tbd>	<tbd>	<tbd>	K/W
			BLC6G22LS-100	<tbd>	0.45	0.54	K/W

6. Characteristics

Table 6: Characteristics

T_j = 25 °C unless otherwise specified

Symbol	Parameter	Conditions	Min	Typ	Max	Unit
$V_{(BR)DSS}$	drain-source breakdown voltage	V_{GS} = 0 V; I_D = 0.5 mA	65	-	-	V
$V_{GS(th)}$	gate-source threshold voltage	V_{DS} = 10 V; I_D = 150 mA	<tbd>	2	<tbd>	V
V_{GSq}	gate-source quiescent voltage	V_{DS} = 28 V; I_D = 950 mA	<tbd>	<tbd>	<tbd>	V
I_{DSS}	drain leakage current	V_{GS} = 0 V; V_{DS} = 28 V	-	-	5	µA
I_{DSX}	drain cut-off current	V_{GS} = $V_{GS(th)}$ + 3.75 V; V_{DS} = 10 V	23	27	-	A
I_{GSS}	gate leakage current	V_{GS} = 13 V; V_{DS} = 0 V	-	-	450	nA
g_{fs}	forward transconductance	V_{DS} = 10 V; I_D = 7.5 A	-	10.5	-	S
$R_{DS(on)}$	drain-source on-state resistance	V_{GS} = $V_{GS(th)}$ + 3.75 V; I_D = 5.25 A	-	0.1	-	Ω
C_{rs}	feedback capacitance	V_{GS} = 0 V; V_{DS} = 28 V; f = 1 MHz	-	<tbd>	-	pF

7. Application information

Table 7: Application information

Mode of operation: 2-carrier W-CDMA; PAR 7 dB at 0.01 % probability on CCDF; 3GPP test model 1; 1-64 PDPCH; f_1 = 2112.5 MHz; f_2 = 2122.5 MHz; f_3 = 2157.5 MHz; f_4 = 2167.5 MHz; RF performance at V_{DS} = 28 V; I_{Dq} = 950 mA; T_{case} = 25 °C; unless otherwise specified; in a class-AB production test circuit

Symbol	Parameter	Conditions	Min	Typ	Max	Unit
$P_{L(AV)}$	average output power		-	25	-	W
G_p	power gain	$P_{L(AV)}$ = 25 W	<tbd>	18	-	dB
IRL	input return loss	$P_{L(AV)}$ = 25 W	-	–9	<tbd>	dB
η_D	drain efficiency	$P_{L(AV)}$ = 25 W	<tbd>	32	-	%
IMD3	third order intermodulation distortion	$P_{L(AV)}$ = 25 W	-	–37	<tbd>	dBc
ACPR	adjacent channel power ratio	$P_{L(AV)}$ = 25 W	-	–40	<tbd>	dBc

7.1 Ruggedness in class-AB operation

The BLC6G22-100 and BLC6G22LS-100 are capable of withstanding a load mismatch corresponding to VSWR = 10 : 1 through all phases under the following conditions: V_{DS} = 28 V; I_{Dq} = 950 mA; P_L = 100 W (CW); f = 2170 MHz.

© Koninklijke Philips Electronics N.V. 2006. All rights reserved.

8. Package outline

Plastic flanged cavity package; 2 mounting slots; 2 leads **SOT895-1**

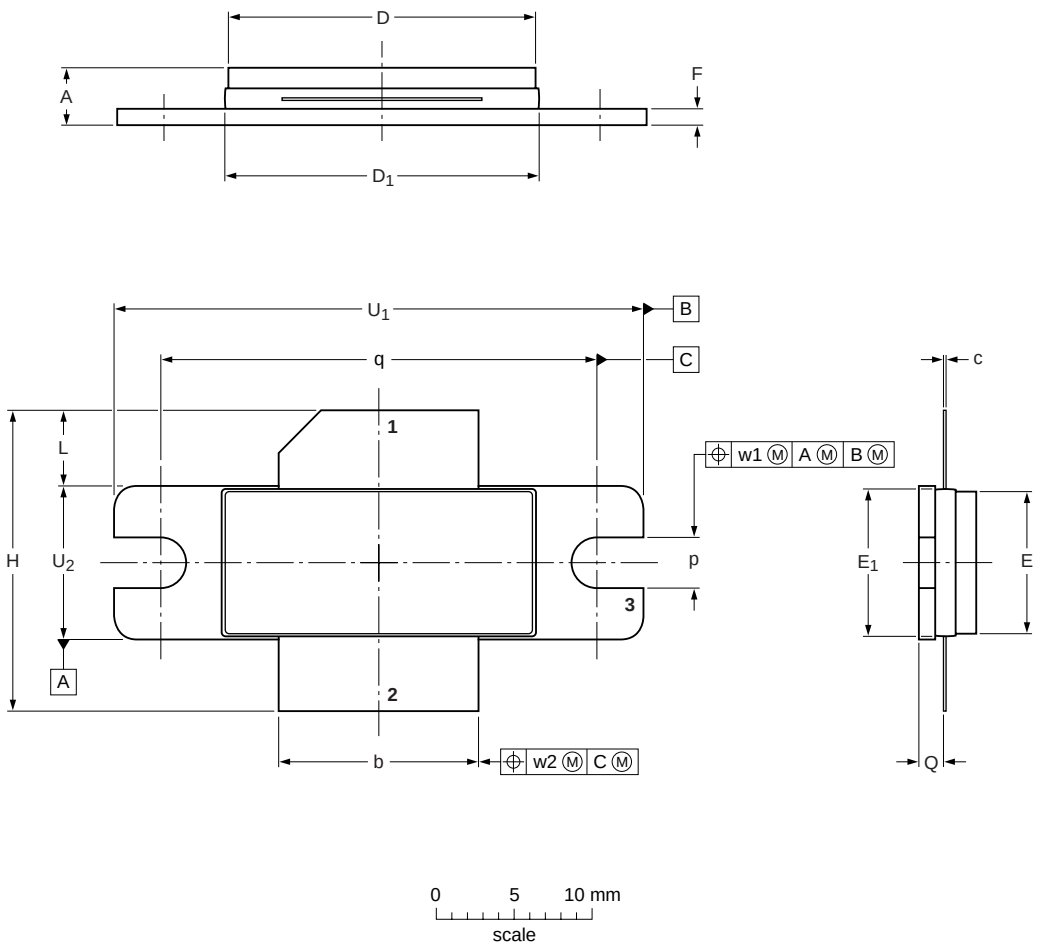

DIMENSIONS (mm are the original dimensions)

UNIT	A	b	c	D	D_1	E	E_1	F	H	L	p	Q	q	U_1	U_2	w_1	w_2
mm	4.1 3.3	12.83 12.57	0.17 0.14	19.9 19.7	20.42 20.12	9.53 9.27	9.78 9.53	1.14 0.89	19.94 18.92	5.3 4.5	3.38 3.12	1.75 1.50	27.94	34.16 33.91	9.91 9.65	0.25	0.6
inches	0.161 0.130	0.505 0.495	0.0065 0.0055	0.785 0.775	0.804 0.792	0.375 0.365	0.385 0.375	0.045 0.035	0.785 0.745	0.209 0.177	0.133 0.123	0.069 0.059	1.100	1.345 1.335	0.390 0.380	0.01	0.023

OUTLINE VERSION	REFERENCES				EUROPEAN PROJECTION	ISSUE DATE
	IEC	JEDEC	JEITA			
SOT895-1						~~05-06-22~~ 05-06-28

Fig 1. Package outline SOT895-1

© Koninklijke Philips Electronics N.V. 2006. All rights reserved.

Plastic earless flanged cavity package; 2 leads **SOT896-1**

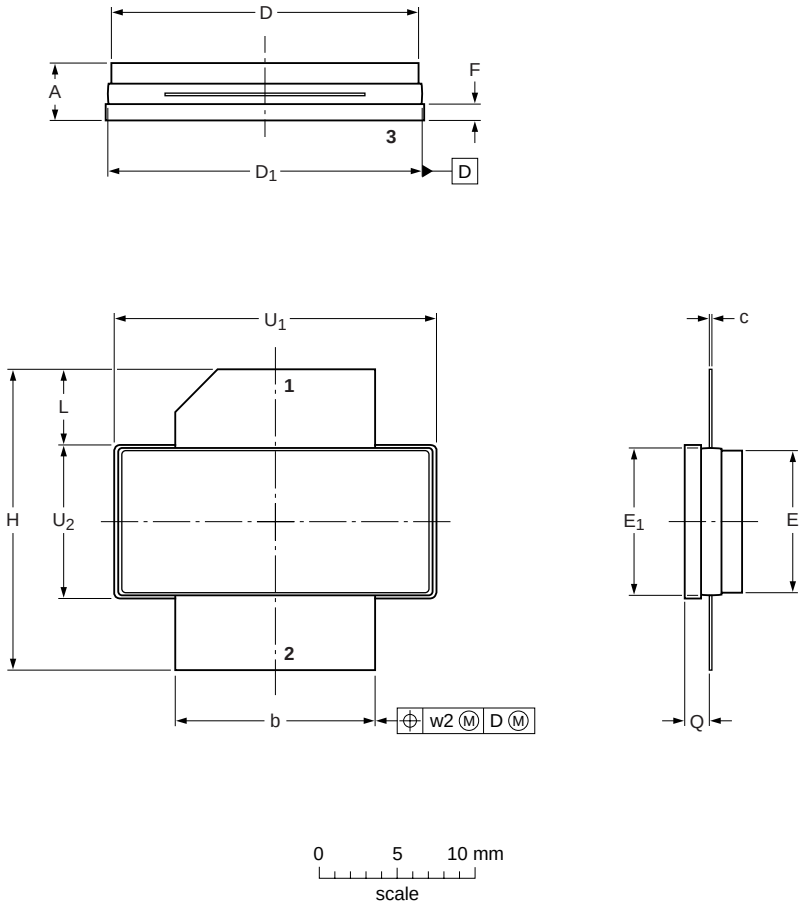

DIMENSIONS (mm are the original dimensions)

UNIT	A	b	c	D	D_1	E	E_1	F	H	L	Q	U_1	U_2	w_2
mm	4.1 3.3	12.83 12.57	0.17 0.14	19.9 19.7	20.42 20.12	9.53 9.27	9.78 9.53	1.14 0.89	19.94 18.92	5.3 4.5	1.75 1.50	20.70 20.45	9.91 9.65	0.6
inches	0.161 0.130	0.505 0.495	0.0065 0.0055	0.785 0.775	0.804 0.792	0.375 0.365	0.385 0.375	0.045 0.035	0.785 0.745	0.209 0.177	0.069 0.059	0.815 0.805	0.390 0.380	0.023

OUTLINE VERSION	REFERENCES				EUROPEAN PROJECTION	ISSUE DATE
	IEC	JEDEC	JEITA			
SOT896-1						~~05-06-22~~ 05-06-28

Fig 2. Package outline SOT896-1

© Koninklijke Philips Electronics N.V. 2006. All rights reserved.

9. Abbreviations

Table 8: Abbreviations

Acronym	Description
3GPP	Third Generation Partnership Project
CCDF	Complementary Cumulative Distribution Function
CW	Continuous Wave
DPCH	Dedicated Physical CHannel
LDMOS	Laterally Diffused Metal Oxide Semiconductor
PAR	Peak-to-Average power Ratio
PDPCH	transmission Power of the Dedicated Physical CHannel
RF	Radio Frequency
VSWR	Voltage Standing Wave Ratio
W-CDMA	Wideband Code Division Multiple Access

© Koninklijke Philips Electronics N.V. 2006. All rights reserved.

10. Revision history

Table 9: Revision history

Document ID	Release date	Data sheet status	Change notice	Doc. number	Supersedes
BLC6G22-100_6G22LS-100_1	20060130	Objective data sheet	-	-	-

© Koninklijke Philips Electronics N.V. 2006. All rights reserved.

11. Data sheet status

Level	Data sheet status [1]	Product status [2] [3]	Definition
I	Objective data	Development	This data sheet contains data from the objective specification for product development. Philips Semiconductors reserves the right to change the specification in any manner without notice.
II	Preliminary data	Qualification	This data sheet contains data from the preliminary specification. Supplementary data will be published at a later date. Philips Semiconductors reserves the right to change the specification without notice, in order to improve the design and supply the best possible product.
III	Product data	Production	This data sheet contains data from the product specification. Philips Semiconductors reserves the right to make changes at any time in order to improve the design, manufacturing and supply. Relevant changes will be communicated via a Customer Product/Process Change Notification (CPCN).

[1] Please consult the most recently issued data sheet before initiating or completing a design.

[2] The product status of the device(s) described in this data sheet may have changed since this data sheet was published. The latest information is available on the Internet at URL http://www.semiconductors.philips.com.

[3] For data sheets describing multiple type numbers, the highest-level product status determines the data sheet status.

12. Definitions

Short-form specification — The data in a short-form specification is extracted from a full data sheet with the same type number and title. For detailed information see the relevant data sheet or data handbook.

Limiting values definition — Limiting values given are in accordance with the Absolute Maximum Rating System (IEC 60134). Stress above one or more of the limiting values may cause permanent damage to the device. These are stress ratings only and operation of the device at these or at any other conditions above those given in the Characteristics sections of the specification is not implied. Exposure to limiting values for extended periods may affect device reliability.

Application information — Applications that are described herein for any of these products are for illustrative purposes only. Philips Semiconductors makes no representation or warranty that such applications will be suitable for the specified use without further testing or modification.

13. Disclaimers

Life support — These products are not designed for use in life support appliances, devices, or systems where malfunction of these products can reasonably be expected to result in personal injury. Philips Semiconductors customers using or selling these products for use in such applications do so at their own risk and agree to fully indemnify Philips Semiconductors for any damages resulting from such application.

Right to make changes — Philips Semiconductors reserves the right to make changes in the products - including circuits, standard cells, and/or software - described or contained herein in order to improve design and/or performance. When the product is in full production (status 'Production'), relevant changes will be communicated via a Customer Product/Process Change Notification (CPCN). Philips Semiconductors assumes no responsibility or liability for the use of any of these products, conveys no license or title under any patent, copyright, or mask work right to these products, and makes no representations or warranties that these products are free from patent, copyright, or mask work right infringement, unless otherwise specified.

14. Trademarks

Notice — All referenced brands, product names, service names and trademarks are the property of their respective owners.

15. Contact information

For additional information, please visit: **http://www.semiconductors.philips.com**

For sales office addresses, send an email to: **sales.addresses@www.semiconductors.philips.com**

© Koninklijke Philips Electronics N.V. 2006. All rights reserved.

16. Contents

1	**Product profile**	**1**
1.1	General description	1
1.2	Features	1
1.3	Applications	2
2	**Pinning information**	**2**
3	**Ordering information**	**2**
4	**Limiting values**	**2**
5	**Thermal characteristics**	**3**
6	**Characteristics**	**3**
7	**Application information**	**3**
7.1	Ruggedness in class-AB operation	3
8	**Package outline**	**4**
9	**Abbreviations**	**6**
10	**Revision history**	**7**
11	**Data sheet status**	**8**
12	**Definitions**	**8**
13	**Disclaimers**	**8**
14	**Trademarks**	**8**
15	**Contact information**	**8**

© Koninklijke Philips Electronics N.V. 2006

All rights are reserved. Reproduction in whole or in part is prohibited without the prior written consent of the copyright owner. The information presented in this document does not form part of any quotation or contract, is believed to be accurate and reliable and may be changed without notice. No liability will be accepted by the publisher for any consequence of its use. Publication thereof does not convey nor imply any license under patent- or other industrial or intellectual property rights.

Date of release: 30 January 2006

Document number: BLC6G22-100_6G22LS-100_1

Published in The Netherlands