BLDC
Motors & Drives

Applied Motion Products



CE RoHS 2002/95/EC

- High performance, low cost, brushless speed control systems
- 30 to 105 watts continuous shaft output
- Operates from 12 to 48V DC power supply
- Driver can supply up to 6.25A continuous, 12.5A peak
- Excellent speed stability
- Eight digital inputs for commanding a variety of functions
- Two digital outputs for interfacing to other equipment
- Two on board potentiometers plus 12 bit analog input for setting speed, acceleration, deceleration

For more information visit: www.applied-motion.com/BLDC

BD5 Drive



- **High performance, low cost speed control drive**
- **Operates from 12 to 48V DC power supply**
- **Output current: up to 6.25Arms continuous, 12.5A peak**
- **Eight digital inputs for commanding a variety of functions**
- **Two digital outputs for interfacing to other equipment**
- **Two on board potentiometers plus 12 bit analog input for setting speed, acceleration, deceleration**

CE RoHS 2002/95/EC

For more information go to
www.applied-motion.com/BLDC

IO Connections

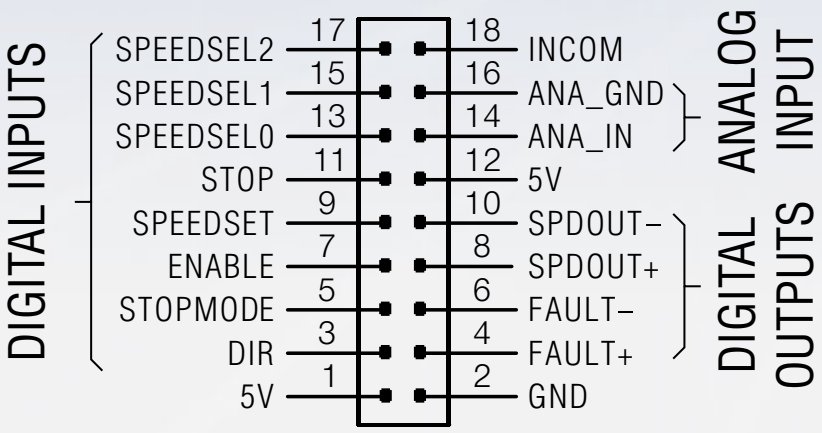

BD5 Dimensions

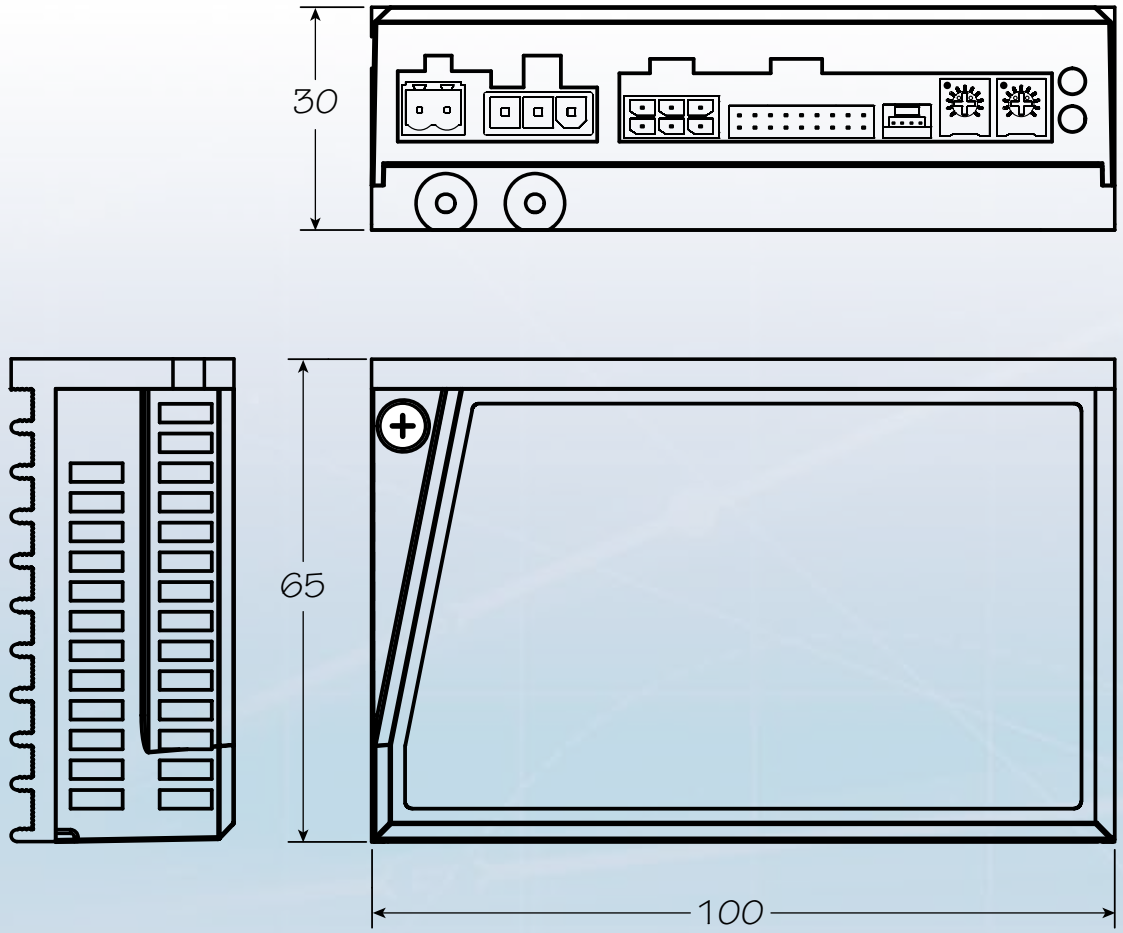



Brushless Drive Technical Specifications

POWER AMPLIFIER:

AMPLIFIER TYPE	Triple half bridge, 4 quadrant
CURRENT CONTROL	4 state PWM at 10 kHz
OUTPUT CURRENT	BD5-G1-AH: 1.75Arms cont, 3.5Arms peak (5 seconds max) BD5-G2-AH: 3.6Arms cont, 7.2Arms peak (5 seconds max) BD5-G3-AH: 6.25Arms cont, 12.5Arms peak (5 seconds max)
POWER SUPPLY	External 12 - 48 VDC power supply required Under-voltage alarm: 8.5 VDC Over-voltage shutdown: 62 VDC

CONTROLLER:

MODE OF OPERATION	Velocity control. Speed can be selected by digital input from on-board potentiometer, external analog signal, or 7 preset speeds. Accel/decel rate set by on-board potentiometer
DIGITAL INPUTS	Eight inputs, 5-24 VDC, bidirectional (can be driven by sinking or sourcing signals) 2 kHz max freq response. Common terminal (INCOM) can be connected to an external power supply (5 to 24 VDC), or internally connected to 5V or GND (selected by internal DIP switches) CW/CCW: selects direction of motor shaft rotation STP: commands motor to stop quickly using electromagnetic braking EN/RE: removes power from motor windings M0,M1,M2: selects one of seven preset speeds STMD: selects which mode of stopping is used SPST: selects whether speed is set by on-board pot or external analog signal
DIGITAL OUTPUTS	30 VDC max, 80 mA max, open collector, open emitter. FLT is a dedicated fault output. SPO is a dedicated tachometer output (30 pulses per revolution). Both outputs can be reconfigred at the factory for qualified OEM applications.
ANALOG INPUT	AIN referenced to GND, Range = 0 to 5 VDC, Resolution = 12 bits, 5v = 4500 rpm.
COMMUNICATION INTERFACE	RS-232 (for factory configuration only)

APPROVALS:

AGENCY APPROVALS	RoHS CE PENDING

PHYSICAL:

OPERATING TEMPERATURE	0 to 100°C (32 to 212°F) Internal temperature of the electronics section
AMBIENT TEMPERATURE	0 to 40°C (32 to 104°F) When mounted to a suitable heatsink
HUMIDITY	90% max, non-condensing
MASS	6.0 oz (170 g)



Motor Specifications

PART #	POWER	RELATED VOLTAGE	RATED CURRENT		RATED TORQUE		KE	ROTOR INERTIA	MASS
	W cont.	VDC	A cont.	A peak	N-M cont.	N-M peak	V/krpm	g-cm^2	g
BL030-H03-G	30	24	1.75	3.5	0.065	0.13	3.65	38.8	320
BL060-H03-G	60	24	3.6	7.2	0.13	0.26	2.7	72	550
BL105-H03-G	105	24	6.25	12.5	0.225	0.45	2.65	114	830

Motor Dimensions

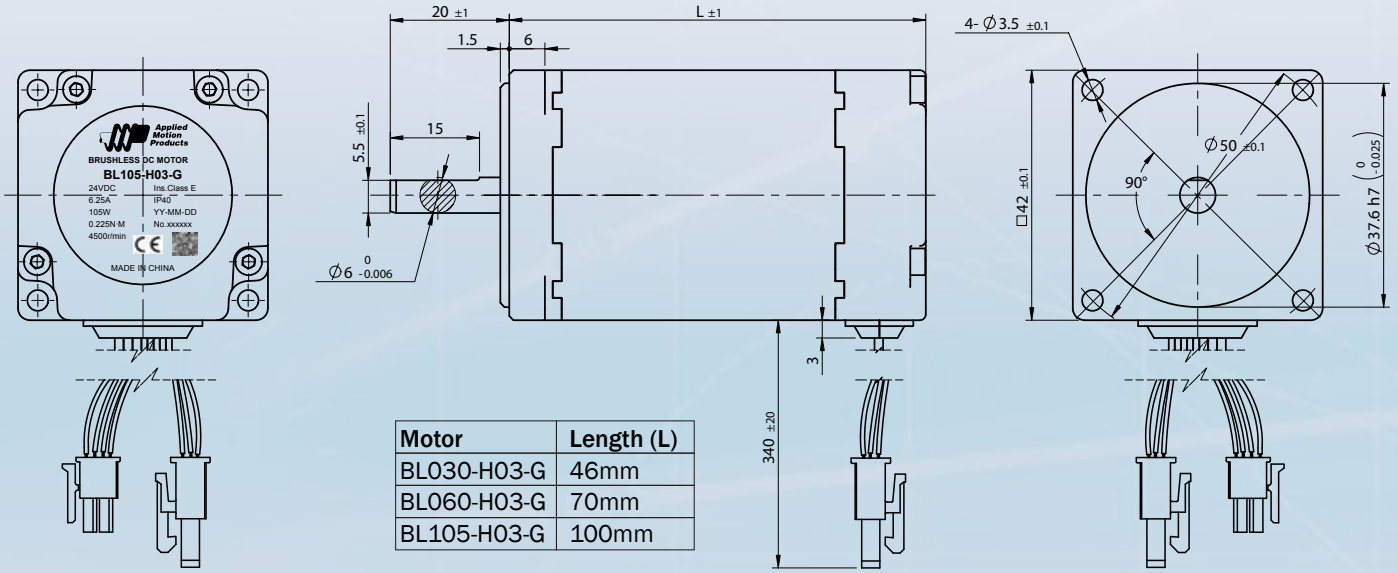

Motor	Length (L)
BL030-H03-G	46mm
BL060-H03-G	70mm
BL105-H03-G	100mm



BLDC Drive Part Numbering System

BD5-G1-AH

Series
BLDC Series

Output Current
5 = 5 A rms cont
10 = 10 A rms cont

Motor Frame Size
G = 42 mm

Motor Winding
1 = 30 W, 24 V
2 = 60 W, 24 V
3 = 105 W, 24 V

Communication
A = RS-232 (for factory configuration only)

Feedback
H = Hall devices

Order this BD5 model...	For use with this BL motor...
1. BD5-G1-AH	1. BL030-H03-G
2. BD5-G2-AH	2. BL060-H03-G
3. BD5-G3-AH	3. BL105-H03-G

BLDC Motor Part Numbering System

BL000-000-0

Series
BL = Brushless DC Motor

Wattage Rating
030 = 30 watts
060 = 60 watts
105 = 105 watts

Feedback
H = Hall devices only

RESERVED

Voltage
3 = 24 VDC

Frame Size
G = 42mm

Standard Part Numbers:
BL030-H03-G
BL060-H03-G
BL105-H03-G

Speed Torque Curves

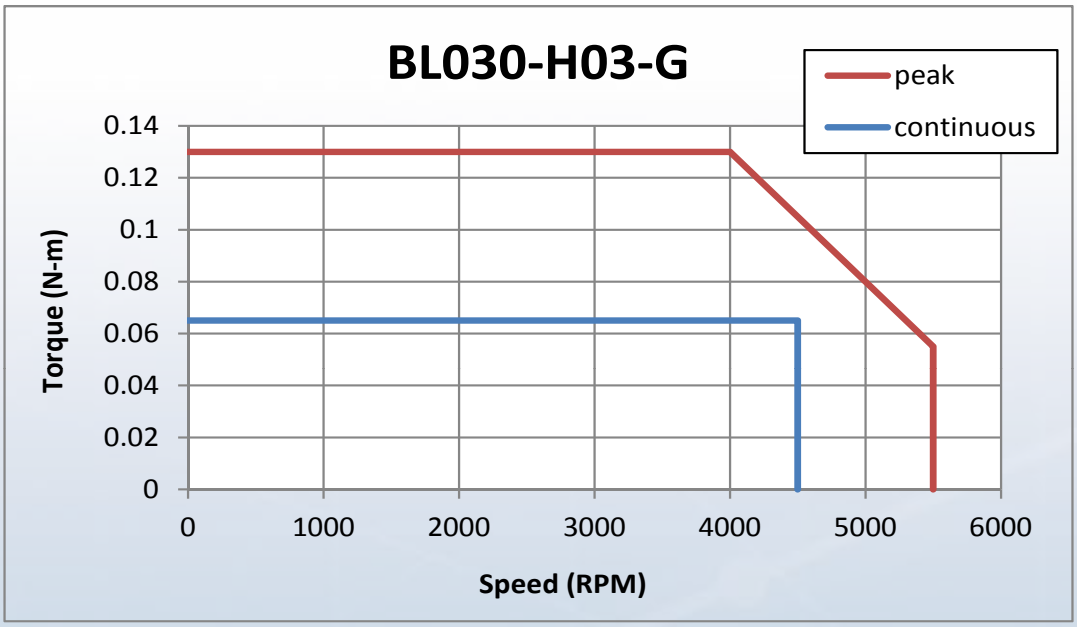

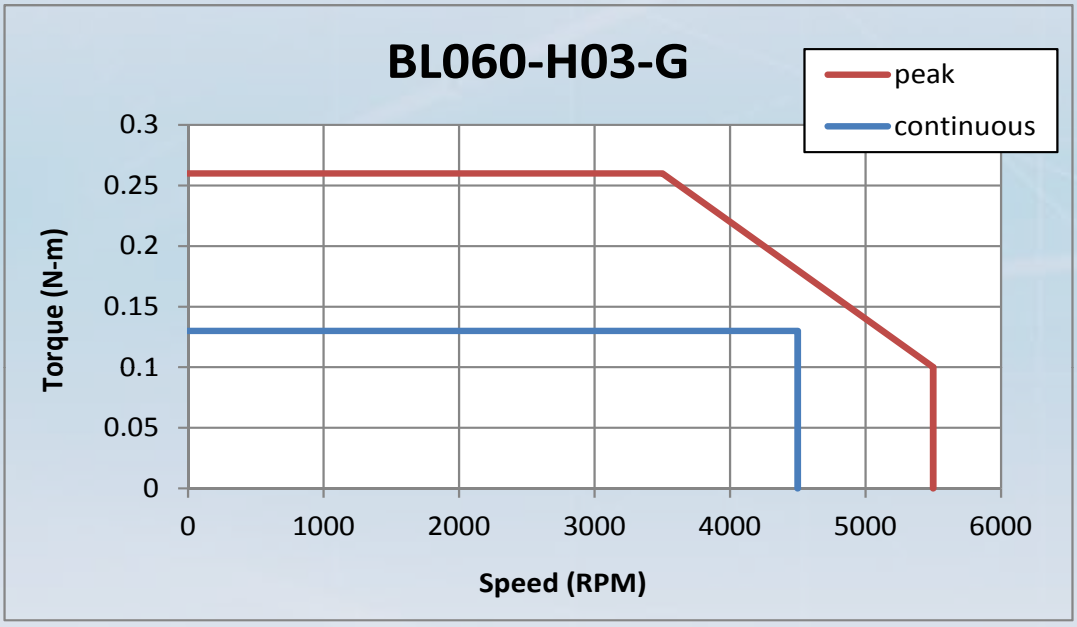

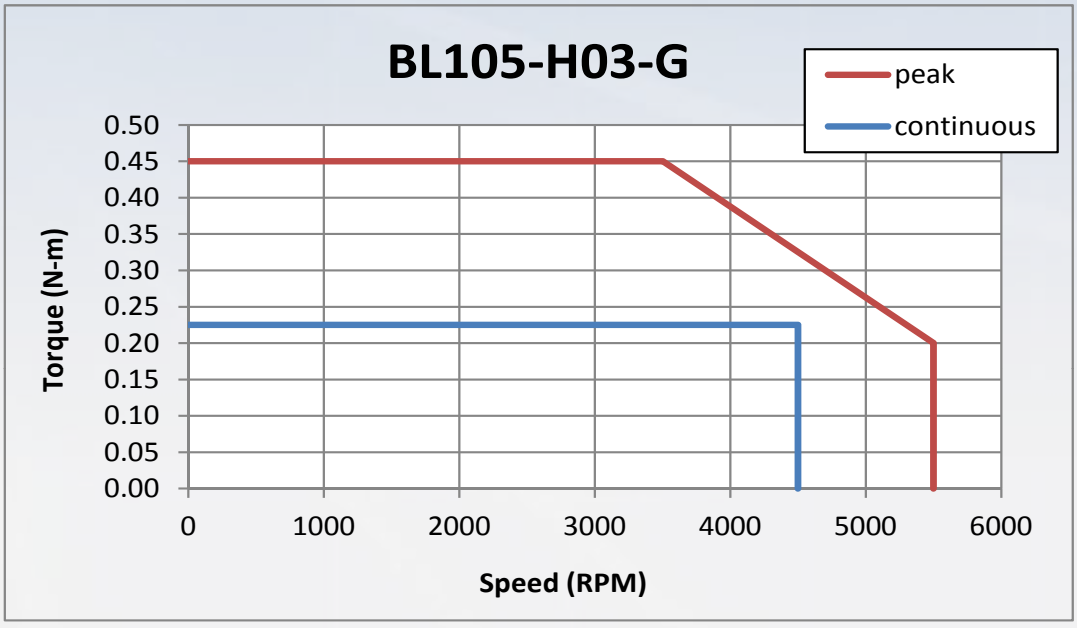

Accessories

Power Supplies

Applied Motion offers the following DC power supplies for use with the brushless DC drives and motors.
PS50A24: 50 Watts at 24 VDC, recommended for BL030-H03-G motor.
PS150A24: 150 Watts at 24 VDC, recommended for BL060-H03-G motor.
PS320A48: 320 Watts at 48 VDC, recommended for BL105-H03-G motor.





RC-050 Regeneration Clamp

The RC-050 regeneration clamp is for use where regeneration from the motor may be excessive for the power supply. In these cases the RC-050 is connected between the drive and power supply and absorbs regenerated energy.

Extension Cable

For applications where motors and drives are separated by more than 30cm (1 foot)

3004–272–1M 1 METER
3004–272–3M 3 METERS

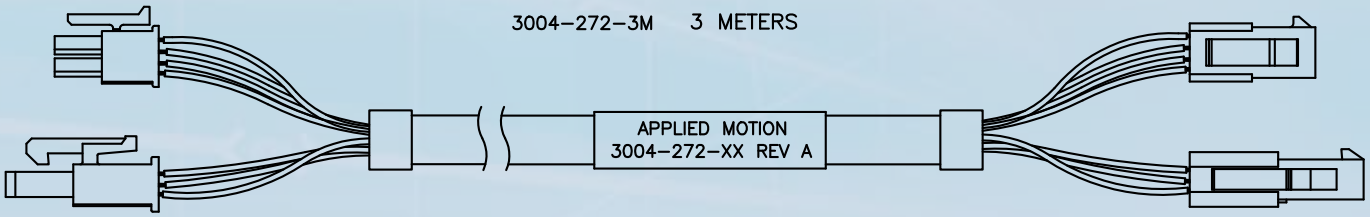



Applied Motion Products
404 Westridge Dr.
Watsonville, CA 95076
Tel: 800-525-1609
Fax: 831-761-6544
www.applied-motion.com

DISTRIBUTED BY: