STANDARD LED LAMPS (ROUND TYPES)

Package	Part No.	Chip		Lens Appearance	Absolute Maximum Ratings				Electro-optical Data (At 20mA)			Viewing Angle 2q 1/2 (deg)	Drawing No.
		Material/Emitted Color	Peak Wave Length lp (nm)		Dl (nm)	Pd (mw)	If (mA)	Peak (mA)	Vf (V)		Iv (mcd)		
									Typ	Max	Typ.		
T-1 Standard 1.0″ Lead 3 ϕ	BL-B4541	GaAsP/GaP/Hi-Eff Red	635	Red Diffused	45	80	30	150	2.0	2.6	40.0		
	BL-B2141	GaP/GaP/Green	568	Green Diffused	30	80	30	150	2.2	2.6	40.0	35	
	BL-B3141	GaAsP/GaP/Yellow	585	Yellow Diffused	35	80	30	150	2.1	2.6	30.0		
	BL-B2441	GaP/GaP/Green	568	Green Trans	30	80	30	150	2.2	2.6	80.0		L-005
	BL-B3441	GaAsP/GaP/Yellow	585	Yellow Trans	35	80	30	150	2.1	2.6	65.0	30	
	BL-B2341	GaP/GaP/Green	568	Water Clear	30	80	30	150	2.2	2.6	80.0		
	BL-BX1341	GaP/GaP/Hi-Eff Green	568		35	80	30	150	2.1	2.6	120.0		
T-1 Standard 1.0″ Lead 3 ϕ	BL-B45V1	GaAsP/GaP/Hi-Eff Red	635	Red Diffused	45	80	30	150	2.0	2.6	40		
	BL-B21V1	GaP/GaP/Green	568	Green Diffused	30	80	30	150	2.2	2.6	40	35	
	BL-B31V1	GaAsP/GaP/Yellow	585	Yellow Diffused	35	80	30	150	2.1	2.6	30		
	BL-B24V1	GaP/GaP/Green	568	Green Trans	30	80	30	150	2.2	2.6	80		L-006
	BL-B34V1	GaAsP/GaP/Yellow	585	Yellow Trans	35	80	30	150	2.1	2.6	65	30	
	BL-B43V1	GaAsP/GaP/Hi-Eff Red	635	Water Clear	45	80	30	150	2.0	2.6	80		
	BL-BX13V1	GaP/GaP/Hi-Eff Green	568		35	80	30	150	2.1	2.6	120		
T-1 1.0″ Lead 3 ϕ	BL-B45V1G	GaAsP/GaP/Hi-Eff Red	635	Red Diffused	45	80	30	150	2.0	2.6	40		
	BL-B21V1G	GaP/GaP/Green	568	Green Diffused	30	80	30	150	2.2	2.6	40	35	
	BL-B31V1G	GaAsP/GaP/Yellow	585	Yellow Diffused	35	80	30	150	2.1	2.6	30		
	BL-B24V1G	GaP/GaP/Green	568	Green Trans	30	80	30	150	2.2	2.6	80		L-007
	BL-B34V1G	GaAsP/GaP/Yellow	585	Yellow Trans	35	80	30	150	2.1	2.6	65	30	
	BL-B43V1G	GaAsP/GaP/Hi-Eff Red	635	Water Clear	45	80	30	150	2.0	2.6	80		
	BL-BX13V1G	GaP/GaP/Hi-Eff Green	568		35	80	30	150	2.1	2.6	120		
1.0 Lead High Flangeless 3.4 ϕ	BL-B51V1H	GaP/GaP/Bright Red	700	Red Diffused	90	40	15	50	2.2	2.6	13.0		
	BL-B45V1H	GaAsP/GaP/Hi-Eff Red	635		45	80	30	150	2.0	2.6	40.0	30	
	BL-B21V1H	GaP/GaP/Green	568	Green Diffused	30	80	30	150	2.2	2.6	50.0		L-008
	BL-B31V1H	GaAsP/GaP/Yellow	585	Yellow Diffused	35	80	30	150	2.1	2.6	30.0		
	BL-B24V1H	GaP/GaP/Green	568	Green Trans	30	80	30	150	2.2	2.6	100	25	
	BL-B46V1H	GaAsP/GaP/Hi-Eff Red	635	Red Trans	45	80	30	150	2.0	2.6	100		
T-1 1.0 Lead High Flangeless 3.0 ϕ	BL-B51V1J	GaP/GaP/Bright Red	700	Red Diffused	90	40	15	50	2.2	2.6	13.0		
	BL-B45V1J	GaAsP/GaP/Hi-Eff Red	635		45	80	30	150	2.0	2.6	40.0	35	
	BL-B21V1J	GaP/GaP/Green	568	Green Diffused	30	80	30	150	2.2	2.6	50.0		L-009
	BL-B31V1J	GaAsP/GaP/Yellow	585	Yellow Diffused	35	80	30	150	2.1	2.6	30.0		
	BL-B24V1J	GaP/GaP/Green	568	Green Trans	30	80	30	150	2.0	2.6	100	30	
T-1 1.0 Lead 3.0 ϕ	BL-B43V1M	GaAsP/GaP/Hi-Eff Red	635	Water Clear	45	80	30	150	2.0	2.6	100		
	BL-B23V1M	GaP/GaP/Green	568		30	80	30	150	2.0	2.6	100		
	BL-B33V1M	GaAsP/GaP/Yellow	585		35	80	30	150	2.1	2.6	30	15	L-010
	BL-B44V1M	GaAsP/GaP/Hi-Eff Red	635	Orange Trans	45	80	30	150	2.0	2.6	100		
	BL-B24V1M	GaP/GaP/Green	568	Green Trans	30	80	30	150	2.0	2.6	100		
T-1 1.0 Lead 3.0 ϕ	BL-B2141P	GaP/GaP/Green	568	Green Diffused	30	80	30	150	2.2	2.6	35		
	BL-B3141P	GaAsP/GaP/Yellow	585	Yellow Diffused	35	80	30	150	2.1	2.6	30	40	
	BL-B4541P	GaAsP/GaP/Hi-Eff Red	635	Red Diffused	45	80	30	150	2.0	2.6	35		L-011
	BL-B2341P	GaP/GaP/Green	568	Water Clear	30	80	30	150	2.2	2.6	80		
	BL-B3341P	GaAsP/GaP/Yellow	585		35	80	30	150	2.1	2.6	60	30	
	BL-B4341P	GaAsP/GaP/Hi-Eff Red	635		45	80	30	150	2.0	2.6	80		
T-1 Standard 1.0 Lead 3.1 ϕ	BL-B4541Q	GaAsP/GaP/Hi-Eff Red	635	Red Diffused	45	80	30	150	2.0	2.6	60.0		
	BL-B2141Q	GaP/GaP/Green	568	Green Diffused	30	80	30	150	2.2	2.6	60.0	40	
	BL-B3141Q	GaAsP/GaP/Yellow	585	Yellow Diffused	35	80	30	150	2.1	2.6	50.0		
	BL-B4141Q	GaAsP/GaP/Orange	635	Orange Diffused	45	80	30	150	2.0	2.6	60.0		L-012
	BL-B3341Q	GaAsP/GaP/Yellow	585	Water Clear	35	80	30	150	2.1	2.6	90.0		
	BL-B2341Q	GaP/GaP/Green	568		30	80	30	150	2.2	2.6	110.0	35	
	BL-BX1341Q	GaP/GaP/Hi-Eff Green	568		30	80	30	150	2.1	2.6	150.0		

Remark: 1. Hi-Eff Red/High-Efficiency Red.
2. Trans/Transparent.
3. 2θ 1/2 The off-axis angle at which the luminous intensity is half the axial luminous intensity.

STANDARD LED LAMPS (ROUND TYPES)

L-005 BL-Bxx41 Series

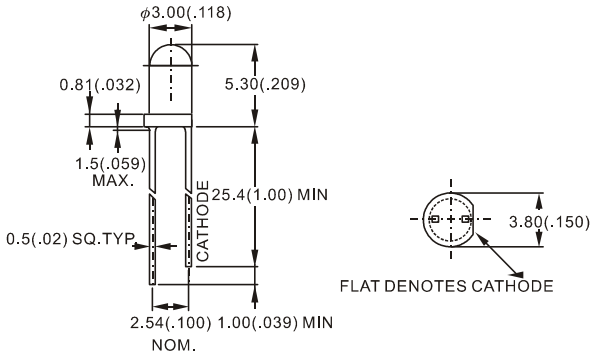

L-006 BL-BxxV1 Series

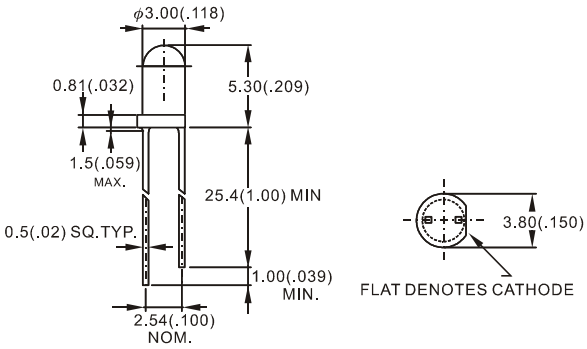

L-007 BL-BxxV1G Series

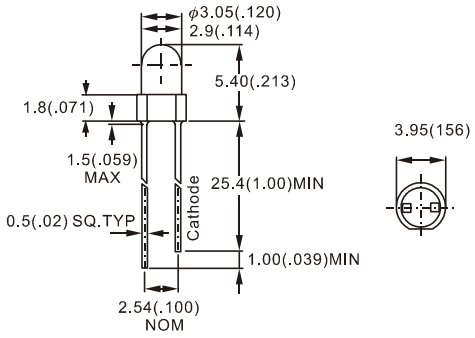

L-008 BL-BxxV1H Series

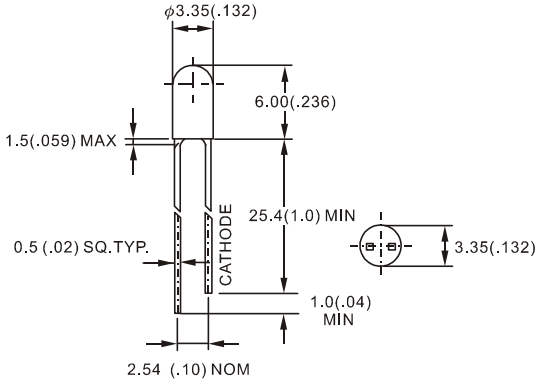

L-009 BL-BxxV1J Series

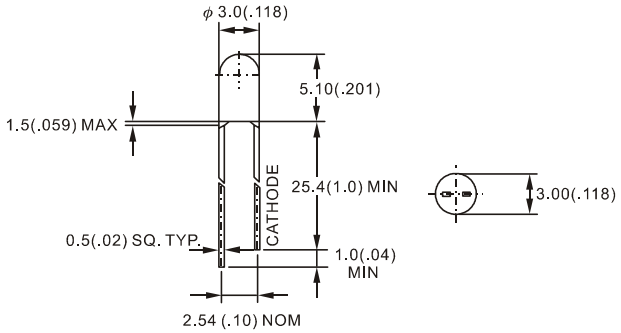

L-010 BL-BxxV1M Series

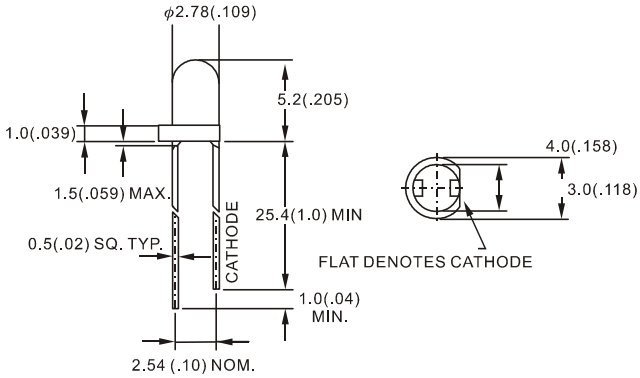

L-011 BL-Bxx41P Series

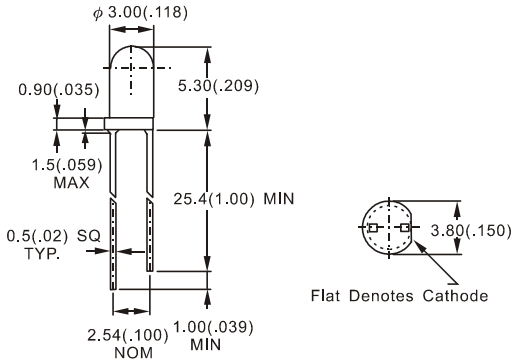

L-012 BL-Bxx41Q Series

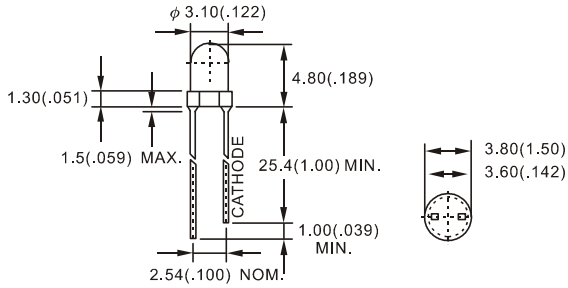

Notes: 1. All Dimensions are in millimeters (inches).
2. Tolerance is ±0.25mm (.010″)

STANDARD LED LAMPS (ROUND TYPES)

Package	Part No.	Chip		Lens Appearance	Absolute Maximum Ratings				Electro-optical Data (At 20mA)			Viewing Angle 2q 1/2 (deg)	Drawing No.
		Material/Emitted Color	Peak Wave Length lp (nm)		Dl (nm)	Pd (mw)	If (mA)	Peak (mA)	Vf (V)		Iv (mcd)		
									Typ	Max	Typ.		
T-1 1.0″ Lead 3.55 ϕ	BL-B51V1T	GaP/GaP/Bright Red	700	Red Diffused	90	40	15	50	2.2	2.6	6.0	35	L-013
	BL-B45V1T	GaAsP/GaP/Hi-Eff Red	635		45	80	30	150	2.0	2.6	70.0		
	BL-B21V1T	GaP/GaP/Green	568	Green Diffused	30	80	30	150	2.2	2.6	70.0		
	BL-B31V1T	GaAsP/GaP/Yellow	585	Yellow Diffused	35	80	30	150	2.1	2.6	60.0		
	BL-B24V1T	GaP/GaP/Green	568	Green Trans	30	80	30	150	2.2	2.6	120.0	30	
	BL-B34V1T	GaAsP/GaP/Yellow	585	Yellow Trans	35	80	30	150	2.1	2.6	100.0		
Standard 1.0″ Lead 4.0 ϕ	BL-B5132	GaP/GaP/Bright Red	700	Red Diffused	90	40	15	50	2.2	2.6	12.0	55	L-014
	BL-B4532	GaAsP/GaP/Hi-Eff Red	635		45	80	30	150	2.0	2.6	70.0		
	BL-B2132	GaP/GaP/Green	568	Green Diffused	30	80	30	150	2.2	2.6	70.0		
	BL-B3132	GaAsP/GaP/Yellow	585	Yellow Diffused	35	80	30	150	2.1	2.6	60.0		
	BL-B4132	GaAsP/GaP/Orange	635	Orange Diffused	45	80	30	150	2.0	2.6	70.0		
	BL-B4632	GaAsP/GaP/Hi-Eff Red	635	Red Trans	45	80	30	150	2.0	2.6	120.0	35	
Medium Profile Flangeless 1.0″ Lead 4.7 ϕ	BL-B4533	GaAsP/GaP/Hi-Eff Red	635	Red Diffused	45	80	30	150	2.0	2.6	80.0	40	L-015
	BL-B2133	GaP/GaP/Green	568	Green Diffused	30	80	30	150	2.2	2.6	80.0		
	BL-B3133	GaAsP/GaP/Yellow	585	Yellow Diffused	35	80	30	150	2.1	2.6	70.0		
	BL-B4133	GaAsP/GaP/Orange	635	Orange Diffused	45	80	30	150	2.0	2.6	80.0		
	BL-B3333	GaAsP/GaP/Yellow	585	Water Clear	35	80	30	150	2.1	2.6	100.0	30	
	BL-B2333	GaP/GaP/Green	568		30	80	30	150	2.2	2.6	130.0		
	BL-B4333	GaAsP/GaP/Orange	635		45	80	30	150	2.0	2.6	130.0		
1.0″ Lead 4.8 ϕ	BL-B5134B	GaP/GaP/Bright Red	700	Red Diffused	90	40	15	50	2.2	2.6	4.0	30	L-016
	BL-B4534B	GaAsP/GaP/Hi-Eff Red	635		45	80	30	150	2.0	2.6	25.0		
	BL-B2134B	GaP/GaP/Green	568	Green Diffused	30	80	30	150	2.2	2.6	25.0		
	BL-B3134B	GaAsP/GaP/Yellow	585	Yellow Diffused	35	80	30	150	2.1	2.6	20		
	BL-B2434B	GaP/GaP/Green	568	Green Trans	30	80	30	150	2.2	2.6	100	20	
	BL-B4634B	GaAsP/GaP/Orange	635	Red Trans	45	80	30	150	2.0	2.6	100		
Medium Profile Flangeless 1.0″ Lead 4.8 ϕ	BL-B5133N	GaP/GaP/Bright Red	700	Red Diffused	90	40	15	50	2.2	2.6	25.0	40	L-017
	BL-B4533N	GaAsP/GaP/Hi-Eff Red	635		45	80	30	150	2.0	2.6	80.0		
	BL-B2133N	GaP/GaP/Green	568	Green Diffused	30	80	30	150	2.2	2.6	80.0		
	BL-B3133N	GaAsP/GaP/Yellow	585	Yellow Diffused	35	80	30	150	2.1	2.6	70.0		
	BL-B2433N	GaP/GaP/Green	568	Green Trans	30	80	30	150	2.2	2.6	130.0	35	
	BL-B3433N	GaAsP/GaP/Yellow	585	Yellow Trans	35	80	30	150	2.1	2.6	100.0		
T-13/4 Standard 0.8 ″ Lead 5.0 ϕ	BL-B5114	GaP/GaP/Bright Red	700	Red Diffused	90	40	15	50	2.2	2.6	6.0	45	L-018
	BL-B4114	GaAsP/GaP/Orange	635		45	80	30	150	2.0	2.6	50.0		
	BL-B2114	GaP/GaP/Green	568	Green Diffused	30	80	30	150	2.2	2.6	50.0		
	BL-B3114	GaAsP/GaP/Yellow	585	Yellow Diffused	35	80	30	150	2.1	2.6	40.0		
	BL-B2414	GaP/GaP/Green	568	Green Trans	30	80	30	150	2.0	2.6	55.0	35	
	BL-B4614	GaAsP/GaP/Hi-Eff Red	635	Red Trans	45	80	30	150	2.0	2.6	55.0		
T-13/4 Standard 0.5 ″ Lead 5.0 ϕ	BL-B4524	GaAsP/GaP/Hi-Eff Red	635	Red Diffused	45	80	30	150	2.0	2.6	25.0	40	L-019
	BL-B2124	GaP/GaP/Green	568	Green Diffused	30	80	30	150	2.2	2.6	25.0		
	BL-B3124	GaAsP/GaP/Yellow	585	Yellow Diffused	35	80	30	150	2.1	2.6	20.0		
	BL-B4124	GaAsP/GaP/Orange	635	Orange Diffused	45	80	30	150	2.0	2.6	25.0		
	BL-B2424	GaP/GaP/Green	568	Green Trans	30	80	30	150	2.2	2.6	65.0	30	
	BL-B3424	GaAsP/GaP/Yellow	585	Yellow Trans	35	80	30	150	2.1	2.6	50.0		
	BL-B2324	GaP/GaP/Green	568	Water Clear	30	80	30	150	2.2	2.6	65.0		
T-13/4 Standard 1.0 ″ Lead 5.0 ϕ	BL-B5134	GaP/GaP/Bright Red	700	Red Diffused	90	40	15	50	2.2	2.6	12.0	35	L-020
	BL-B4534	GaAsP/GaP/Hi-Eff Red	635		45	80	30	150	2.0	2.6	80.0		
	BL-B2134	GaP/GaP/Green	568	Green Diffused	30	80	30	150	2.2	2.6	80.0		
	BL-B3134	GaAsP/GaP/Yellow	585	Yellow Diffused	35	80	30	150	2.1	2.6	70.0		
	BL-B2434	GaP/GaP/Green	568	Green Trans	30	80	30	150	2.0	2.6	200	12	
	BL-B4634	GaAsP/GaP/Yellow	635	Red Trans	45	80	30	150	2.0	2.6	200		

STANDARD LED LAMPS (ROUND TYPES)

L-013 BL-BxxV1T Series

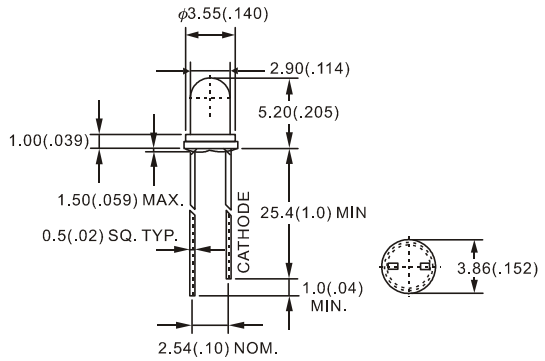

L-014 BL-Bxx32 Series

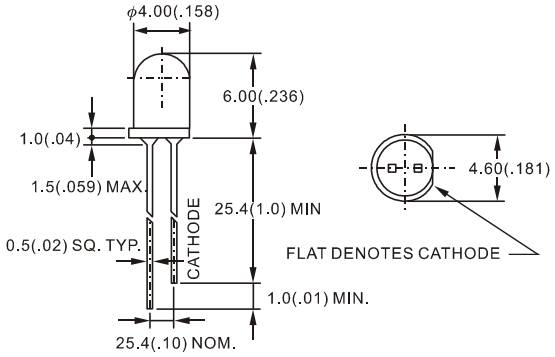

L-015 BL-Bxx33 Series

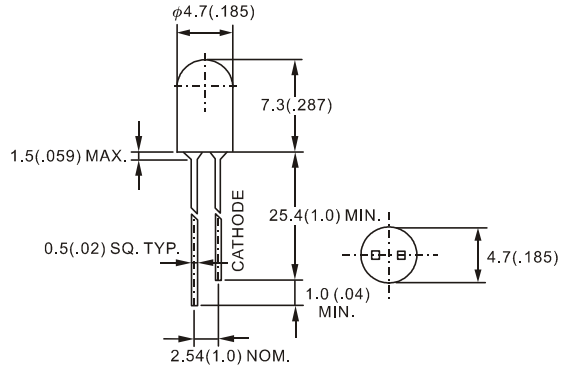

L-016 BL-Bxx34B Series

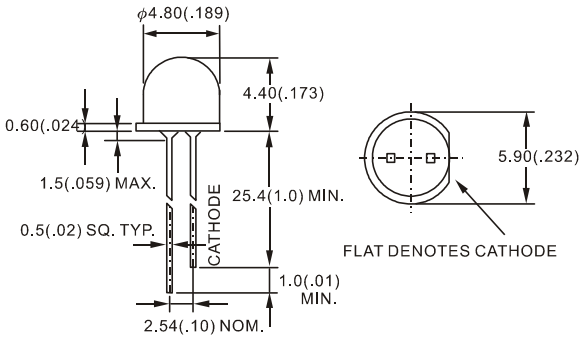

L-017 BL-Bxx33N Series

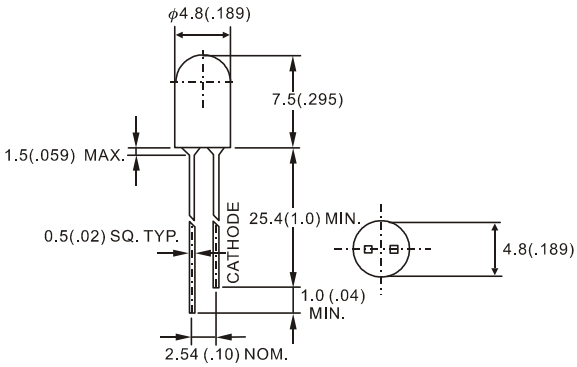

L-018 BL-Bxx14 Series

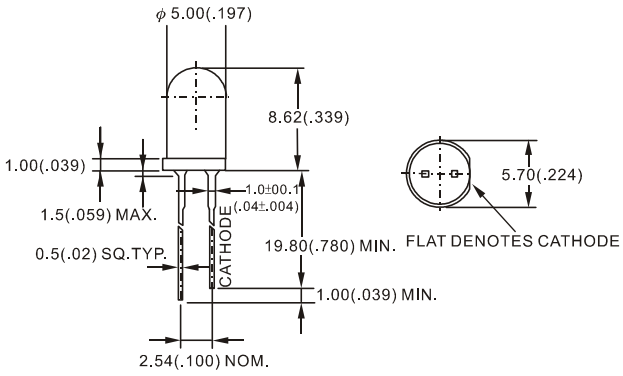

L-019 BL-Bxx24 Series

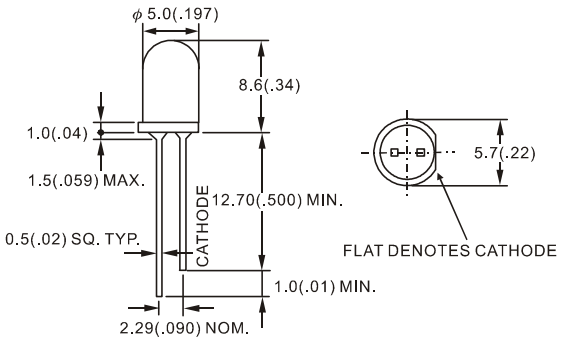

L-020 BL-Bxx34 Series

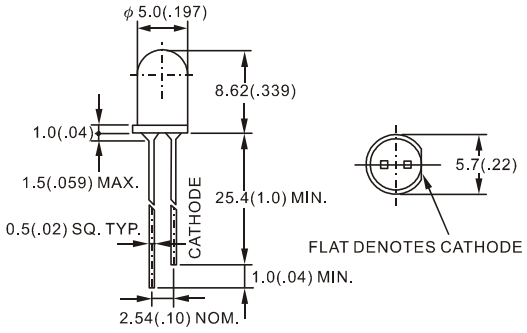

Notes: 1. All Dimensions are in millimeters (inches).
2. Tolerance is ±0.25mm (.010″)

STANDARD LED LAMPS (ROUND TYPES)

Package	Part No.	Chip		Lens Appearance	Absolute Maximum Ratings				Electro-optical Data (At 20mA)			Viewing Angle 2θ 1/2 (deg)	Drawing No.
		Material/Emitted Color	Peak Wave Length λp (nm)		Dλ (nm)	Pd (mw)	If (mA)	Peak (mA)	Vf (V)		Iv (mcd)		
									Typ	Max	Typ.		
T1 3/4 Wide Viewing Angle 1.0″ Lead 5.0ϕ	BL-B4534G-1	GaAsP/GaP/Hi-Eff Red	635	Red Diffused	45	80	30	150	2.0	2.6	65.0	45	L-021
	BL-B2134G-1	GaP/GaP/Green	568	Green Diffused	30	80	30	150	2.2	2.6	65.0		
	BL-B3131G-1	GaAsP/GaP/Yellow	585	Yellow Diffused	35	80	30	150	2.1	2.6	60.0		
	BL-B4134G-1	GaAsP/GaP/Orange	635	Orange Diffused	45	80	30	150	2.0	2.6	65.0		
	BL-B3334G-1	GaAsP/GaP/Yellow	585	Water Clear	35	80	30	150	2.1	2.6	140.0	20	
	BL-B2334G-1	GaP/GaP/Green	568		30	80	30	150	2.2	2.6	150.0		
	BL-B4334G-1	GaAsP/GaP/Orange	635		45	80	30	150	2.0	2.6	150.0		
T1 3/4 Wide Viewing Angle 1.0″ Lead 5.0ϕ	BL-B4534J	GaAsP/GaP/Hi-Eff Red	635	Red Diffused	45	80	30	150	2.0	2.6	65.0	40	L-022
	BL-B2134J	GaP/GaP/Green	568	Green Diffused	30	80	30	150	2.2	2.6	65.0		
	BL-B3134J	GaAsP/GaP/Yellow	585	Yellow Diffused	35	80	30	150	2.1	2.6	60.0		
	BL-B4134J	GaAsP/GaP/Orange	635	Orange Diffused	45	80	30	150	2.0	2.6	65.0		
	BL-B3334J	GaAsP/GaP/Yellow	585	Water Clear	35	80	30	150	2.1	2.6	120.0	20	
	BL-B2334J	GaP/GaP/Green	568		30	80	30	150	2.2	2.6	140.0		
	BL-B4334J	GaAsP/GaP/Orange	635		45	80	30	150	2.0	2.6	140.0		
T1 3/4 Flangeless 1.0″ Lead 5.0ϕ	BL-B5134N	GaP/GaP/Bright Red	700	Red Diffused	90	40	15	50	2.2	2.6	13.0	40	L-023
	BL-B4534N	GaAsP/GaP/Hi-Eff Red	635		45	80	30	150	2.0	2.6	80.0		
	BL-B2134N	GaP/GaP/Green	568	Green Diffused	30	80	30	150	2.2	2.6	80.0		
	BL-B3134N	GaAsP/GaP/Yellow	585	Yellow Diffused	35	80	30	150	2.1	2.6	70.0		
	BL-B2434N	GaP/GaP/Green	568	Green Trans	30	80	30	150	2.0	2.6	140.0	20	
	BL-B4334N	GaAsP/GaP/Orange	635	Water Clear	45	80	30	150	2.0	2.6	140.0		
T1 3/4 Flangeless 1.0″ Lead 5.0ϕ	BL-B5134Q	GaP/GaP/Bright Red	700	Red Diffused	90	40	15	50	2.2	2.6	5.0	50	L-024
	BL-B4534Q	GaAsP/GaP/Hi-Eff Red	635		45	80	30	150	2.0	2.6	55		
	BL-B2134Q	GaP/Gap/Green	568	Green Diffused	30	80	30	150	2.2	2.6	55		

STANDARD LED LAMPS (ROUND TYPES)

L-021 BL-Bxx34G-1 Series	L-022 BL-Bxx34J Series
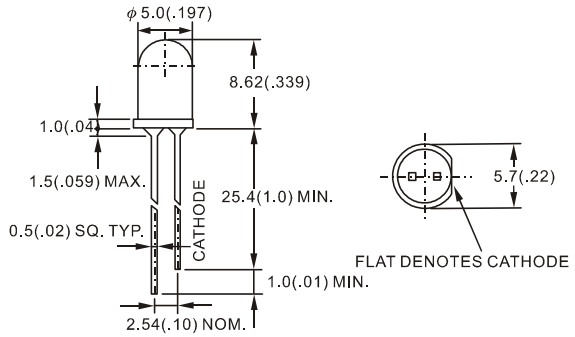	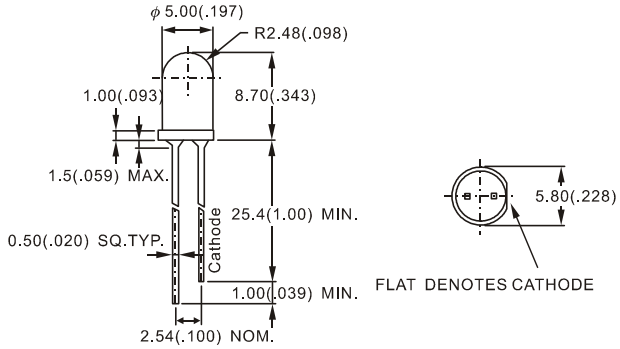
L-023 BL-Bxx34N Series	**L-024 BL-Bxx34Q Series**
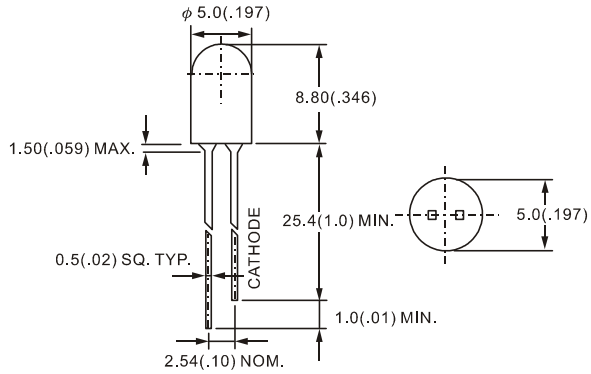	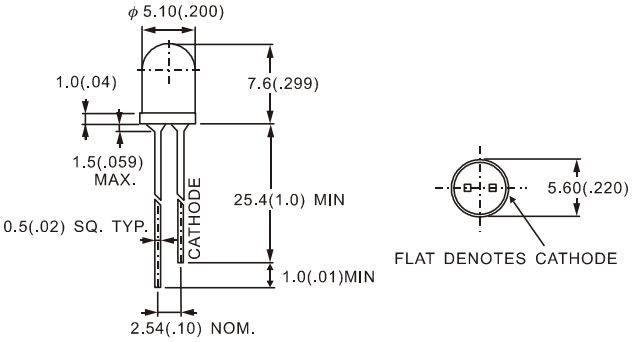

Notes: 1. All Dimensions are in millimeters (inches).
2. Tolerance is ±0.25mm (.010″)