UHF (860...960 MHz)

BIS U-112-M4/CAA
Order Code: BIS018F

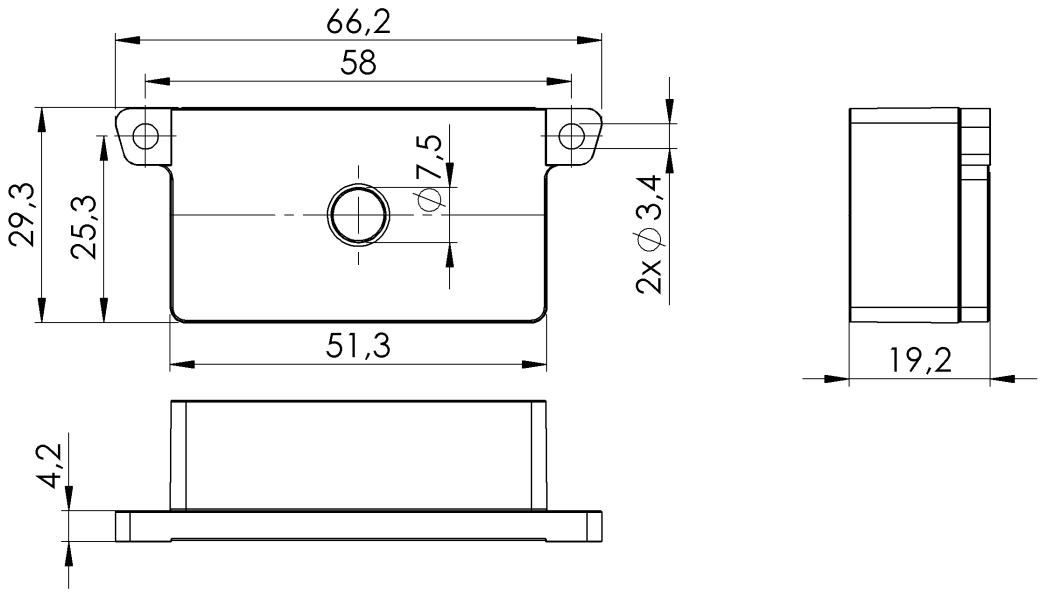

Basic features

Antenna type	Dipole
Approval/Conformity	CE WEEE
EN 55022	Size 1, Cl. B
Principle of operation	Transponder
Standards	EPCglobal™ Class 1, Gen 2 ISO 18000-6C

Electrical data

Data retention time/years	≥ 10
EN 61000-4-2/3/4/5/6	Severity. Level 4B / 3A / - / - /-
Polarization	linear
Preferred application	865…868 MHz
Programming cycles	up to 25 °C: 100,000
Read cycles	Unlimited
Working frequency	860…960 MHz

Environmental conditions

Ambient temperature	-40...85 °C
Continuous shock load	yes
EN 60068-2-27, Shock	yes
EN 60068-2-32 Free fall	yes
EN 60068-2-6, Vibration	yes
IP rating	IP67
Storage temperature	-40...85 °C

Functional Characteristics

EPC memory, read/write	96 Bit
Memory type	EEPROM
TID memory, read-only	48 Bit
User data, read/write	0 Bit

Material

Housing material	PVDF

Mechanical data

Dimension	29.3 x 19.2 x 66.2 mm
Installation	metal-free (clear zone)

Remarks

For installation in metal: Observe clear zone.
Observe clear zone when attaching to metal surfaces!
Torsional, bending and impact loading is not permitted.
Values are under rated conditions unless otherwise specified.