EVERLIGHT ELECTRONICS CO.,LTD.

Technical Data Sheet

1206 Package Chip LEDs

15-21/BHC-AN1P2/2T



Features

- Package in 8mm tape on 7″ diameter reel.
- Compatible with automatic placement equipment.
- Compatible with infrared and vapor phase reflow solder process.
- Mono-color type.
- Pb-free.
- The product itself will remain within RoHS complaint version.

Descriptions

- The 15-21 SMD Taping is much smaller than lead frame type components, thus enable smaller board size, higher packing density, reduced storage space and finally smaller equipment to be obtained.
- Besides, lightweight makes them ideal for miniature applications. etc.

Applications

- Automotive: backlighting in dashboard and switch.
- Telecommunication: indicator and backlighting in telephone and fax.
- Flat backlight for LCD, switch and symbol.
- General use.

Device Selection Guide

PART No.	Chip		Lens Color
	Material	Emitted Color	
15-21/BHC-AN1P2/2T	InGaN	Blue	Water Clear

15-21/BHC-AN1P2/2T

Package Outline Dimensions

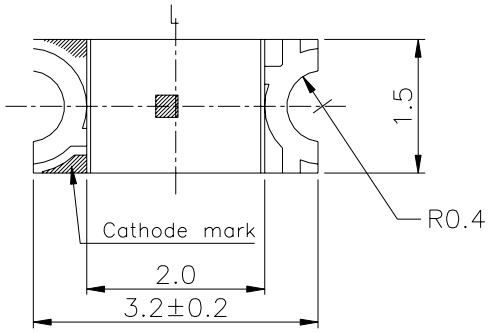

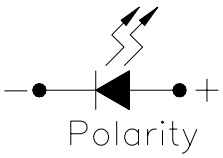

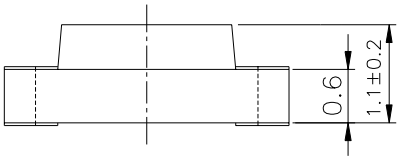

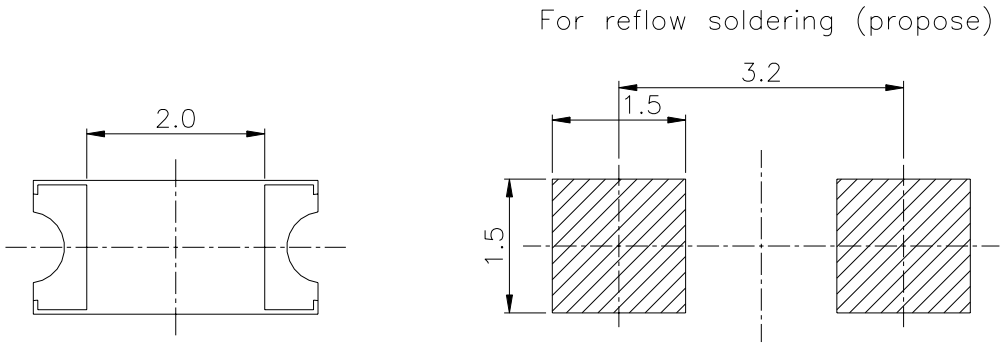

Note: Tolerances Unless Dimension is ±0.1mm , Unit = mm

15-21/BHC-AN1P2/2T

Absolute Maximum Ratings (Ta=25℃)

Parameter	Symbol	Rating	Unit
Reverse Voltage	V_R	5	V
Forward Current	I_F	25	mA
Operating Temperature	Topr	-40 ~ +85	℃
Storage Temperature	Tstg	-40~ +90	℃
Electrostatic Discharge(HBM)	ESD	150	V
Power Dissipation	Pd	110	mW
Peak Forward Current (Duty 1/10 @1KHz)	I_F	100	mA
Soldering Temperature	Tsol	Reflow Soldering : 260 ℃ for 10 sec. Hand Soldering : 350 ℃ for 3 sec.	

Electro-Optical Characteristics (Ta=25℃)

Parameter	Symbol	Min.	Typ.	Max.	Unit	Condition
Luminous Intensity	Iv	28.5	-----	72	mcd	I_F=20mA
Viewing Angle	2θ 1/2	-----	130	-----	deg	
Peak Wavelength	λ p	-----	468	-----	nm	
Dominant Wavelength	λ d	464.5	-----	476.5	nm	
Spectrum Radiation Bandwidth	$\triangle\lambda$	-----	25	-----	nm	
Forward Voltage	V_F	-----	3.5	4.0	V	
Reverse Current	I_R	-----	-----	50	μA	V_R=5V

Bin Range Of Dom. Wavelength

Group	Bin	Min	Max	Unit	Condition
A	A9	464.5	467.5	nm	IF=20mA
	A10	467.5	470.5		
	A11	470.5	473.5		
	A12	473.5	476.5		

Bin Range Of Luminous Intensity

Bin	Min	Max	Unit	Condition
N1	28.5	36.0	mcd	IF=20mA
N2	36.0	45.0		
P1	45.0	57.0		
P2	57.0	72.0		

Notes:

1.Tolerance of Luminous Intensity ±10%

2.Tolerance of Dominant Wavelength ±1nm

3.Tolerance of Forward Voltage ±0.1V

Typical Electro-Optical Characteristics

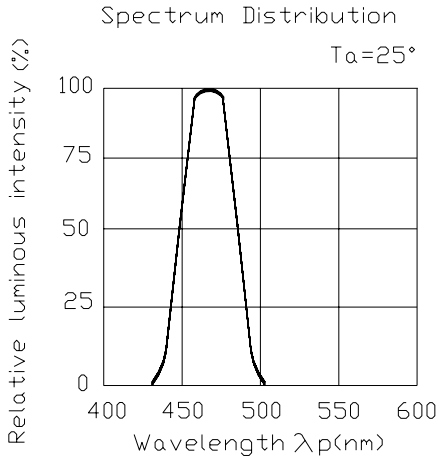

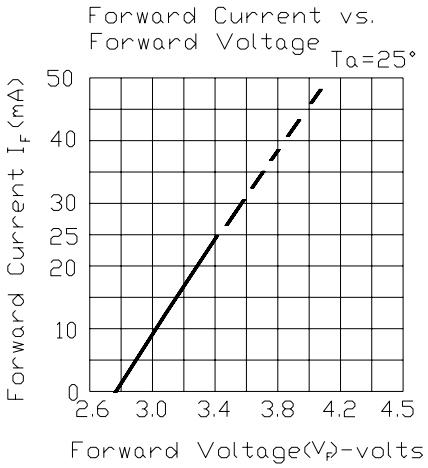

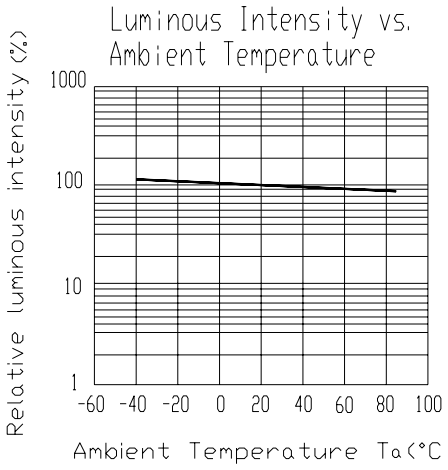

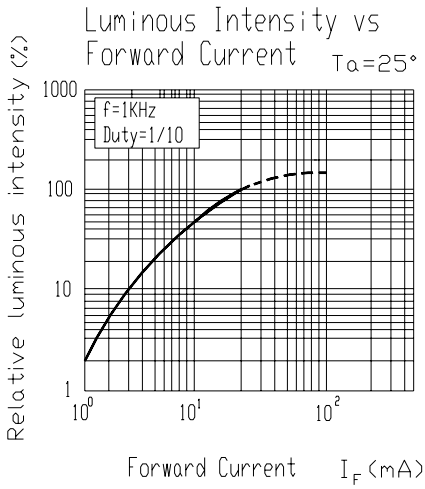

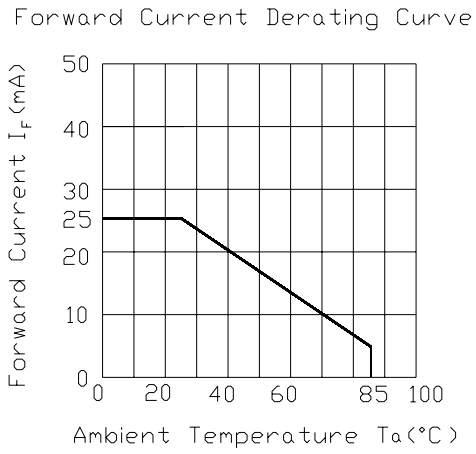

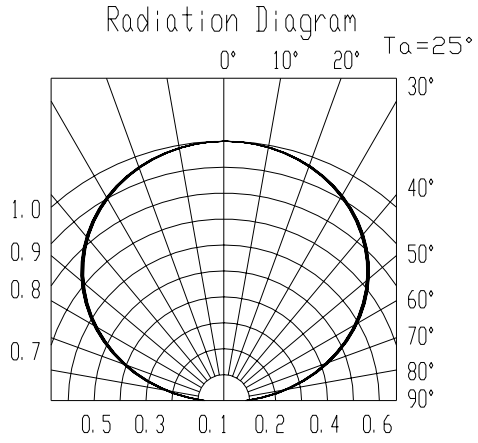

15-21/BHC-AN1P2/2T

Label explanation

CAT: Luminous Intensity Rank

HUE: Dom. Wavelength Rank

REF: Forward Voltage Rank

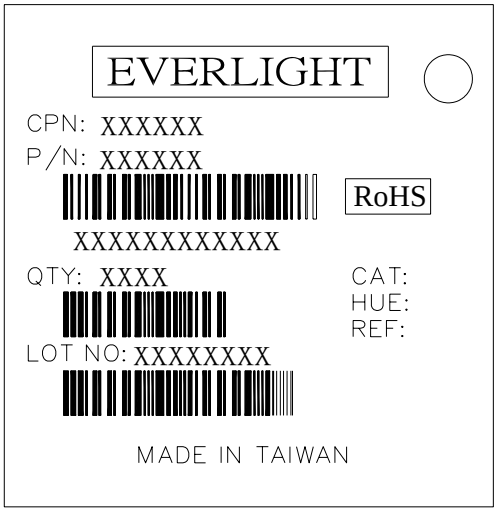

Reel Dimensions

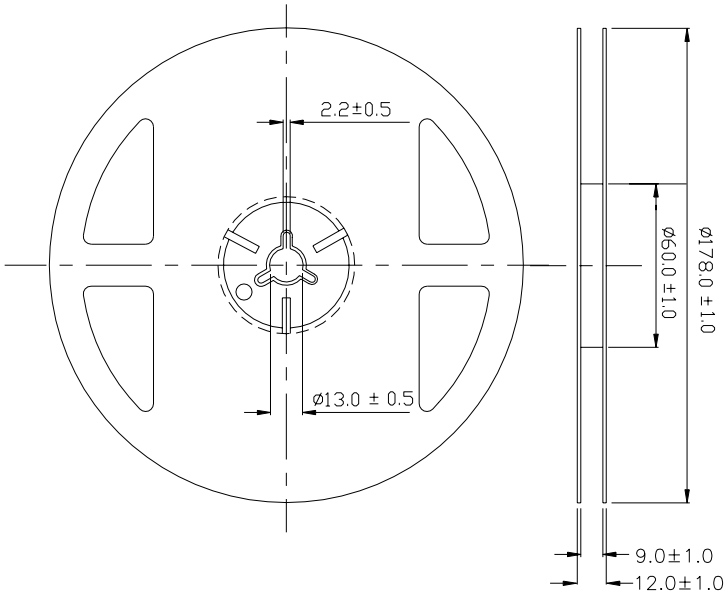

Note: Tolerances Unless Dimension is ±0.1mm , Unit = mm

Carrier Tape Dimensions: Loaded quantity 2000 PCS per reel

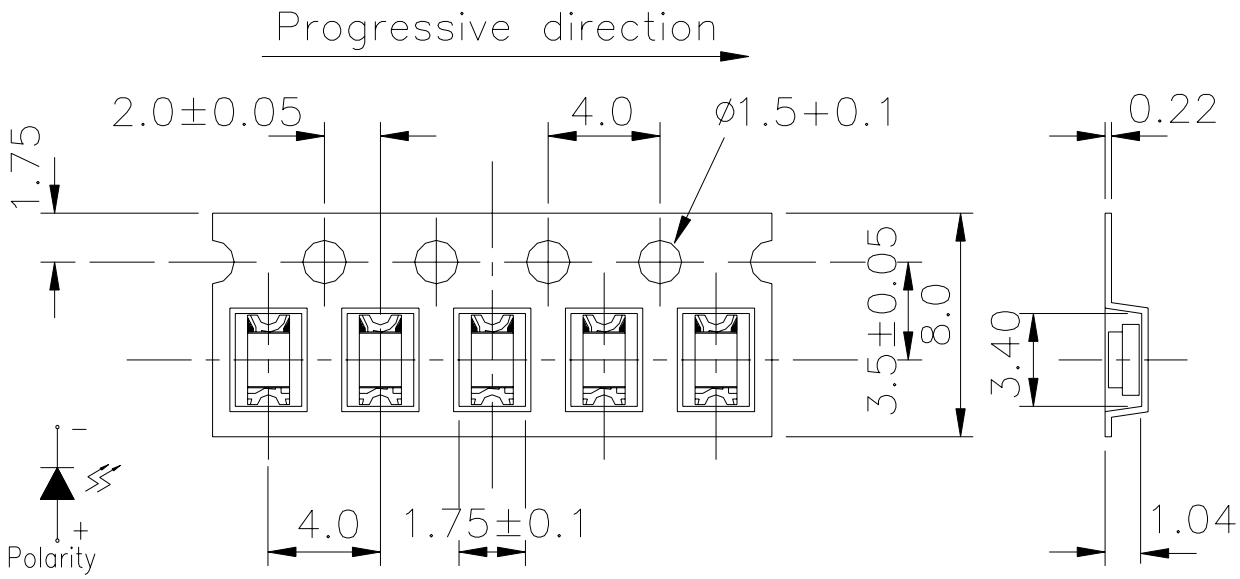

Note: Tolerances Unless Dimension is ±0.1mm , Unit = mm

Moisture Resistant Packaging

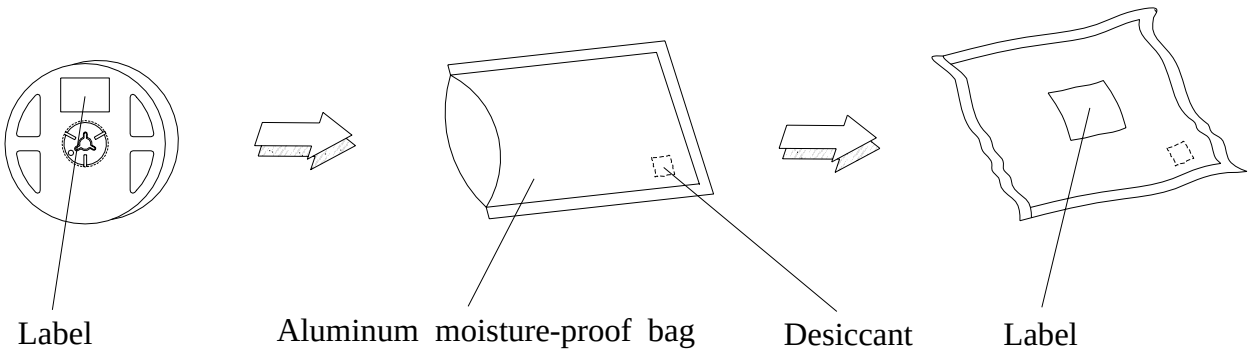

Reliability Test Items And Conditions

The reliability of products shall be satisfied with items listed below.
Confidence level：90%
LTPD：10%

No.	Items	Test Condition	Test Hours/Cycles	Sample Size	Ac/Re
1	Reflow Soldering	Temp. : 260℃±5℃ 5 sec.	6 Min.	22 Pcs.	0/1
2	Temperature Cycle	H : +100℃ 15min ∫ 5 min L : -40℃ 15min	300 Cycles	22 PCS.	0/1
3	Thermal Shock	H : +100℃ 5min ∫ 10 sec L : -10℃ 5min	300 Cycles	22 PCS.	0/1
4	High Temperature Storage	Temp. : 100℃	1000 Hrs.	22 PCS.	0/1
5	Low Temperature Storage	Temp. : -40℃	1000 Hrs.	22 PCS.	0/1
6	DC Operating Life	I_F = 20 mA	1000 Hrs.	22 PCS.	0/1
7	High Temperature / High Humidity	85℃/85%RH	1000 Hrs.	22 PCS.	0/1

Precautions For Use

1. Over-current-proof

Customer must apply resistors for protection , otherwise slight voltage shift will cause big current change (Burn out will happen).

2. Storage

2.1 Do not open moisture proof bag before the products are ready to use.

2.2 Before opening the package, the LEDs should be kept at 30℃ or less and 90%RH or less.

2.3 The LEDs should be used within a year.

2.4 After opening the package, the LEDs should be kept at 30℃ or less and 60%RH or less.

2.5 The LEDs should be used within 168 hours (7 days) after opening the package.

2.6 If the moisture absorbent material (silica gel) has faded away or the LEDs have exceeded the storage time, baking treatment should be performed using the following conditions.
Baking treatment : 60±5℃ for 24 hours.

3. Soldering Condition

3.1 Pb-free solder temperature profile

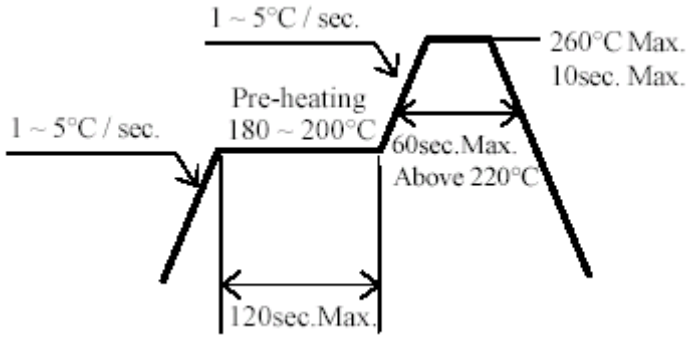

3.2 Reflow soldering should not be done more than two times.

3.3 When soldering, do not put stress on the LEDs during heating.

3.4 After soldering, do not warp the circuit board.

4.Soldering Iron

Each terminal is to go to the tip of soldering iron temperature less than 350℃ for 3 seconds within once in less than the soldering iron capacity 25W. Leave two seconds and more intervals, and do soldering of each terminal. Be careful because the damage of the product is often started at the time of the hand solder.

5.Repairing

Repair should not be done after the LEDs have been soldered. When repairing is unavoidable, a double-head soldering iron should be used (as below figure). It should be confirmed beforehand whether the characteristics of the LEDs will or will not be damaged by repairing.

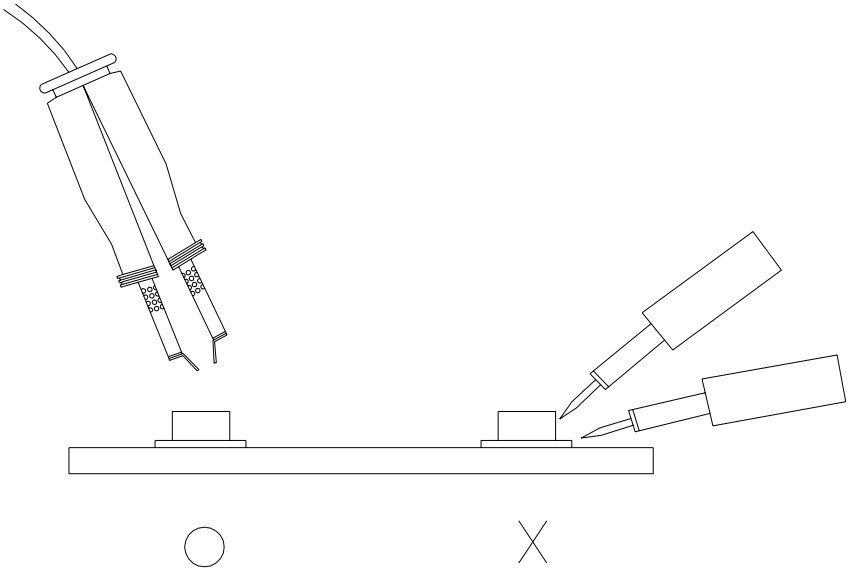

EVERLIGHT ELECTRONICS CO., LTD.
Office: No 25, Lane 76, Sec 3, Chung Yang Rd,
Tucheng, Taipei 236, Taiwan, R.O.C

Tel: 886-2-2267-2000, 2267-9936
Fax: 886-2267-6244, 2267-6189, 2267-6306
http://www.everlight.com