T1/CEPT/ISDN-PRI TRANSFORMERS
P/N: BH-S5351

A. GENERAL INFORMATION:

•EXTENDED AND STANDARD TEMPERATURE RANGE MODELS.

•DUAL SURFACE MOUNT PACKAGE CONTAINS BOTH TRANSMIT AND RECEIVE.

•MODELS MATCHED TO LEADING TRANSCEIVER ICs.

•1500 VRMS ISOLATION VOLTAGE

B. ELECTRICAL SPECIFICATIONS @ 25°C

Turns Ratio (pri:sec +/-5%)	OCL@ 25°C (mH MIN)	Cw/w (pF MAX)	Llsec (uH MAX)	DCR pri (ΩMAX)	DCR sec (ΩMAX)	Primary Pins
1 : 2CT	1.20	40	0.50	0.70	1.3	2-6

C. MECHANICAL DRAWING & SCHEMATIC: (mm)

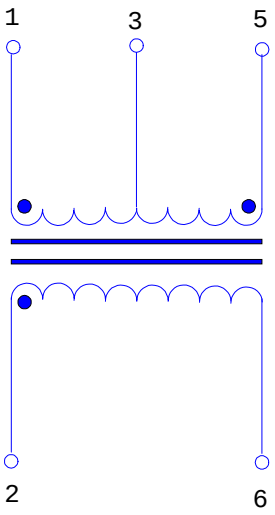

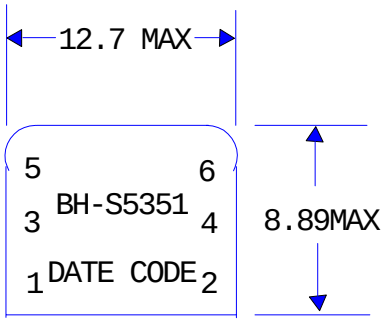

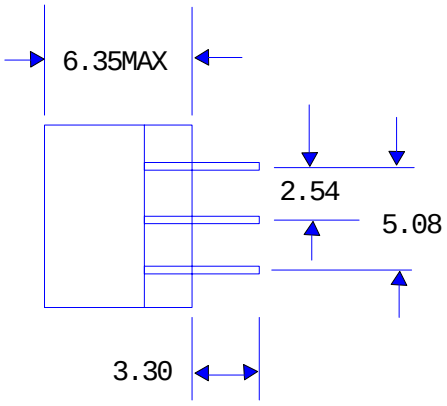

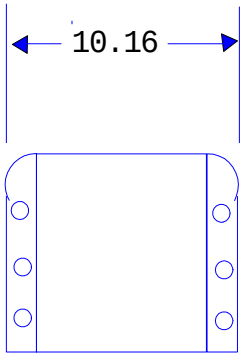

Date: Jan 22, 2000

REV: X1