DATA SHEET

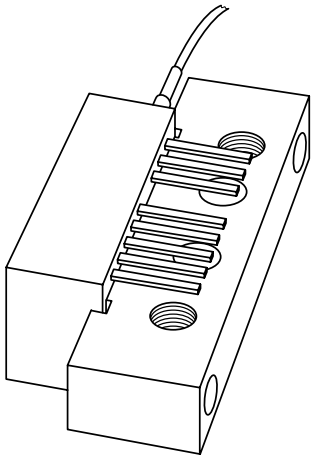

BGO747; BGO747/FC0; BGO747/SC0

750 MHz optical receivers

Product specification
Supersedes data of 2002 Apr 18

2002 Dec 03

Philips
Semiconductors

PHILIPS

750 MHz optical receivers

BGO747; BGO747/FC0; BGO747/SC0

FEATURES

- Excellent linearity
- Extremely low noise up to 750 MHz
- Excellent flatness (straight line)
- Standard CATV outline
- Rugged construction
- Gold metallization ensures excellent reliability
- High optical input power range.

APPLICATIONS

- CATV optical node systems operating in the 40 to 750 MHz frequency range.

DESCRIPTION

High dynamic range optical receiver amplifier modules in a standard SOT115 package where the non-jacketed fibre has either no connector or an FC/APC connector or an SC/APC connector.

The amplifier supply voltage pin and the photo diode bias voltage pin both connect to 24 V (DC).

The modules have a monomode optical input suitable for 1290 to 1600 nm wavelengths, a terminal to monitor the photo diode current and an electrical output having a characteristic impedance of 75 Ω.

PINNING

PIN	DESCRIPTION
1	monitor current
2	common
3	common
4	$+V_B$ of the photo diode
5	$+V_B$ of the amplifier
7	common
8	common
9	output

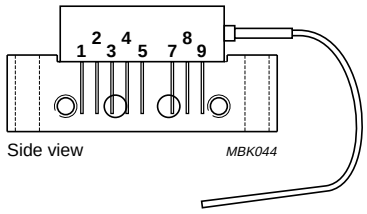

Fig.1 Simplified outline BGO747 (SOT115T).

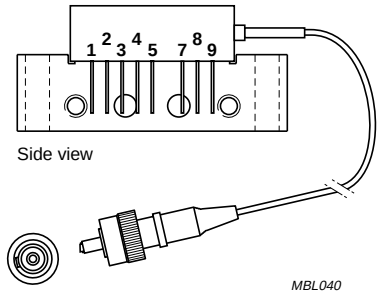

Fig.2 Simplified outline BGO747/FC0 (SOT115X).

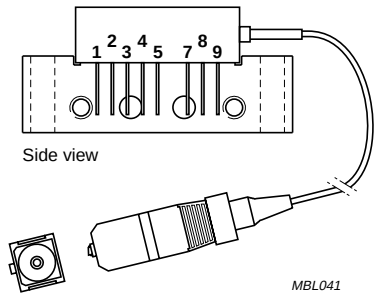

Fig.3 Simplified outline BGO747/SC0 (SOT115Y).

QUICK REFERENCE DATA

SYMBOL	PARAMETER	CONDITIONS	MIN.	MAX.	UNIT
f	frequency range		40	750	MHz
s_{22}	output return losses	f = 40 to 785 MHz	11	–	dB
	optical input return losses		45	–	dB
d_2	second order distortion	f = 746.5 MHz	–	–63	dB
F	equivalent noise input	f = 40 to 750 MHz	–	7	pA/√Hz
I_{tot}	total current consumption (DC)	V_B = 24 V	175	205	mA

CAUTION
This product is supplied in anti-static packing to prevent damage caused by electrostatic discharge during transport and handling. For further information, refer to Philips specs.: SNW-EQ-608, SNW-FQ-302A and SNW-FQ-302B.

HANDLING

Fibreglass optical coupling: maximum tensile strength = 5 N; minimum bending radius = 35 mm.

LIMITING VALUES

In accordance with the Absolute Maximum Rating System (IEC 60134).

SYMBOL	PARAMETER	CONDITIONS	MIN.	MAX.	UNIT
f	frequency range		40	750	MHz
T_{stg}	storage temperature		–40	+85	°C
T_{mb}	operating mounting base temperature		–20	+85	°C
P_{in}	optical input power	continuous	–	5	mW
ESD	ESD sensitivity	human body model; R = 1.5 kΩ; C = 100 pF	500	–	V

CHARACTERISTICS

Bandwidth 40 to 750 MHz; V_B = 24 V; T_{mb} = 30 °C; Z_L = 75 Ω.

SYMBOL	PARAMETER	CONDITIONS	MIN.	MAX.	UNIT
S	responsivity				
	BGO747	λ = 1300 nm	800	–	V/W
	BGO747/FC0, BGO747/SC0	λ = 1300 nm	750	–	V/W
FL	flatness straight line	peak to valley; f = 40 to 750 MHz	–	1	dB
SL	slope straight line	f = 40 to 750 MHz	0	2	dB
s_{22}	output return losses	f = 40 to 785 MHz	11	–	dB
	optical input return losses		45	–	dB
d_2	second order distortion	f_m = 54 MHz; notes 1 and 3	–	–73	dB
		f_m = 446.5 MHz; notes 1 and 4	–	–68	dB
		f_m = 548.5 MHz; notes 1 and 5	–	–67	dB
		f_m = 746.5 MHz; notes 1 and 6	–	–63	dB
d_3	third order distortion	f_m = 55.25 MHz; notes 2 and 7	–	–80	dB
		f_m = 445.25 MHz; notes 2 and 8	–	–75	dB
		f_m = 547.25 MHz; notes 2 and 9	–	–75	dB
		f_m = 745.25 MHz; notes 2 and 10	–	–75	dB
F	equivalent noise input	f = 40 to 750 MHz	–	7	pA/√Hz
s_λ	spectral sensitivity	λ = 1310 ±20 nm	0.85	–	A/W
		λ = 1550 ±20 nm	0.9	–	A/W
λ	optical wavelength		1290	1600	nm
L	length of optical fibre				
	BGO747	fibre; SM type; 9/125 μm	1	–	m
	BGO747/FC0, BGO747SC0	fibre; SM type; 9/125 μm	746	861	mm
I_{tot}	total current consumption (DC)		175	205	mA
I_{bias}	diode bias current at pin 4 (DC)		–	25	mA

Notes

1. Two laser test; each laser with 25% modulation index; P_{opt} = 1 mW (total).
2. Three laser test; each laser with 60% modulation index; P_{opt} = 1 mW (total).
3. f_m = 54 MHz; f_p = 187.25 MHz; f_q = 133.25 MHz.
4. f_m = 446.5 MHz; f_p = 97.25 MHz; f_q = 349.25 MHz.
5. f_m = 548 .5MHz; f_p = 109.25 MHz; f_q = 439.25 MHz.
6. f_m = 746.5 MHz; f_p = 133.25 MHz; f_q = 613.25 MHz.
7. f_m = 55.25 MHz; f_p = 109.25 MHz; f_q = 133.25 MHz f_r = 187.25 MHz.
8. f_m = 445.25 MHz; f_p = 193.25 MHz; f_q = 349.25 MHz f_r = 97.25 MHz.
9. f_m = 547.25 MHz; f_p = 217.25 MHz; f_q = 439.25 MHz f_r = 109.25 MHz.
10. f_m = 745.25 MHz; f_p = 133.25 MHz; f_q = 265.25 MHz f_r = 613.25 MHz.

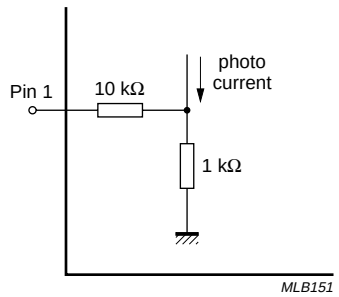

Fig.4 Monitor current pin.

PACKAGE OUTLINES

Rectangular single-ended package; aluminium flange; 2 vertical mounting holes; 2 x 6-32 UNC and 2 extra horizontal mounting holes; optical input; 8 gold-plated in-line leads **SOT115T**

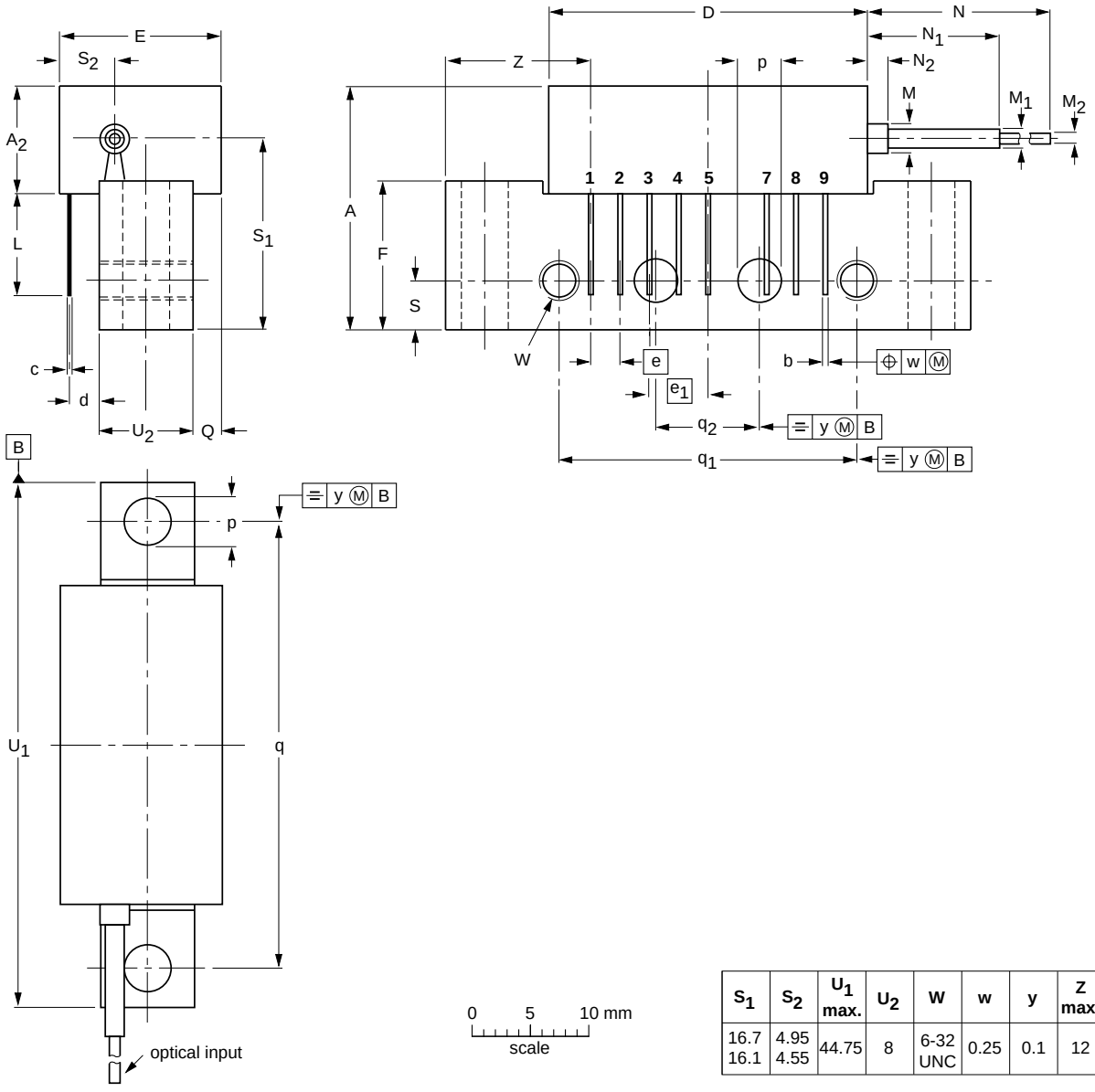

S_1	S_2	U_1 max.	U_2	W	w	y	Z max.
16.7 16.1	4.95 4.55	44.75	8	6-32 UNC	0.25	0.1	12

DIMENSIONS (mm are the original dimensions)

UNIT	A max.	A_2 max.	b	c	D max.	d max.	E max.	e	e_1	F	L min.	M	M_1	M_2	N min.	N_1 max.	N_2 max.	p	Q max.	q	q_1	q_2	S
mm	20.8	9.1	0.51 0.38	0.25	27.2	2.54	13.75	2.54	5.08	12.7	8.8	2.5	1.6	0.9	1000	10.7	5	4.15 3.85	2.4	38.1	25.4	10.2	4.2

OUTLINE VERSION	REFERENCES				EUROPEAN PROJECTION	ISSUE DATE
	IEC	JEDEC	EIAJ			
SOT115T						~~99-04-13~~ 01-08-10

Rectangular single-ended package; aluminium flange;
2 vertical mounting holes; 2 x 6-32 UNC and 2 extra horizontal mounting holes;
optical input with connector; 8 gold-plated in-line leads **SOT115X**

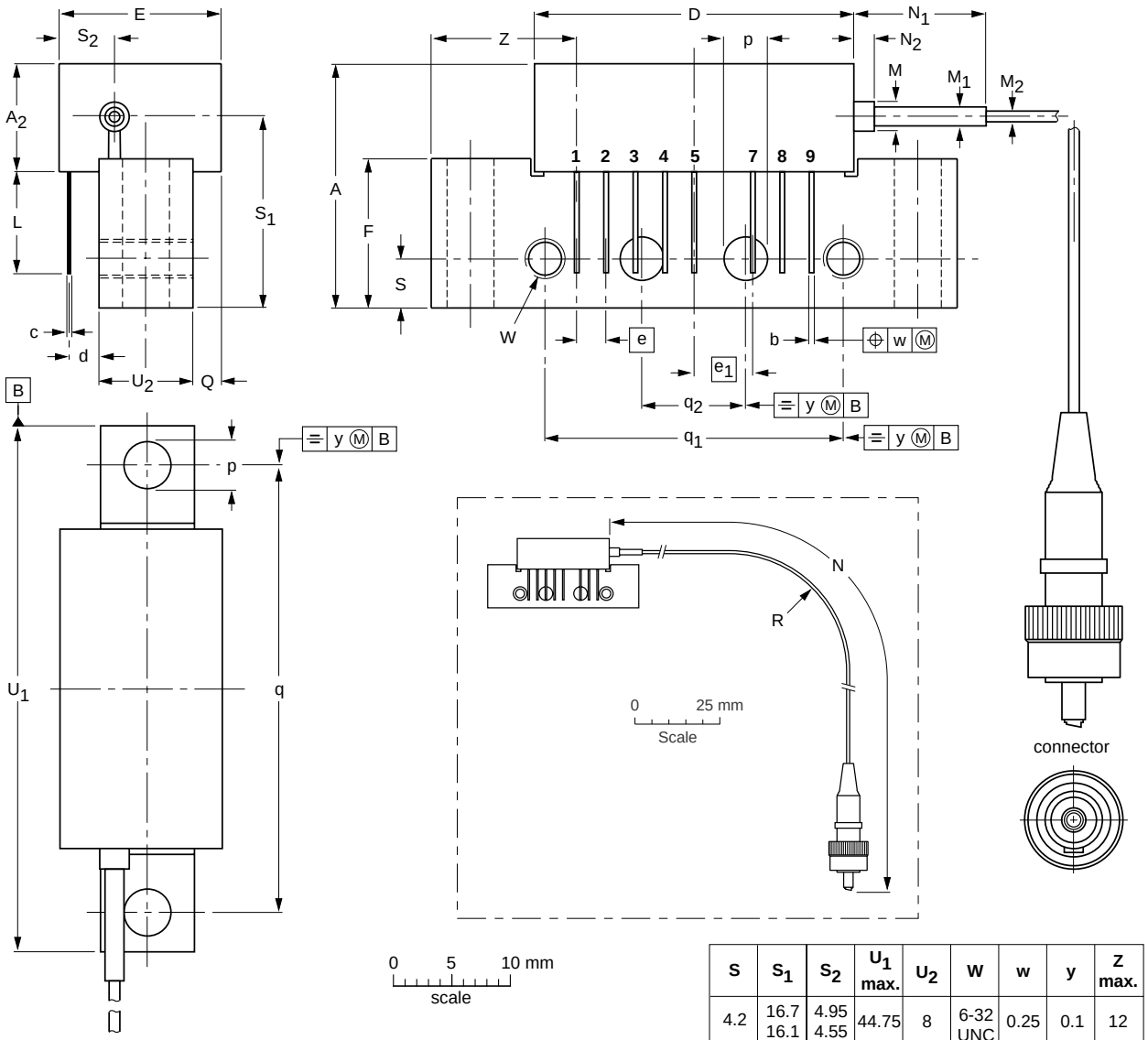

S	S_1	S_2	U_1 max.	U_2	W	w	y	Z max.
4.2	16.7 16.1	4.95 4.55	44.75	8	6-32 UNC	0.25	0.1	12

DIMENSIONS (mm are the original dimensions)

UNIT	A max.	A_2 max.	b	c	D max.	d max.	E max.	e	e_1	F	L min.	M	M_1	M_2	N	N_1 max.	N_2 max.	p	Q max.	q	q_1	q_2	R min.
mm	20.8	9.1	0.51 0.38	0.25	27.2	2.54	13.75	2.54	5.08	12.7	8.8	2.5	1.6	0.9	861 746	10.7	5	4.15 3.85	2.4	38.1	25.4	10.2	35

OUTLINE VERSION	REFERENCES				EUROPEAN PROJECTION	ISSUE DATE
	IEC	JEDEC	EIAJ			
SOT115X						~~00-01-06~~ 01-08-10

Rectangular single-ended package; aluminium flange;
2 vertical mounting holes; 2 x 6-32 UNC and 2 extra horizontal mounting holes;
optical input with connector; 8 gold-plated in-line leads **SOT115Y**

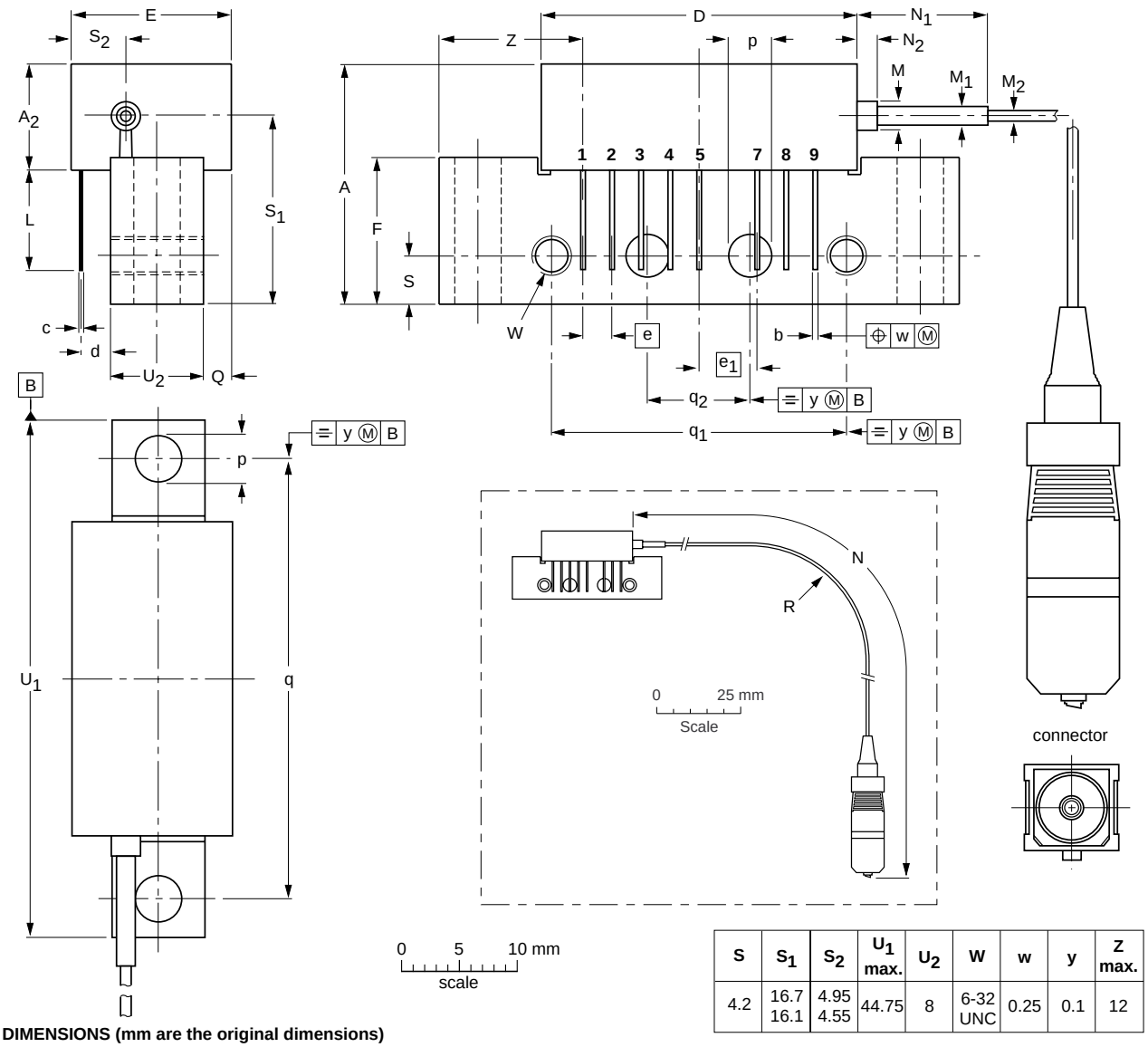

S	S_1	S_2	U_1 max.	U_2	W	w	y	Z max.
4.2	16.7 16.1	4.95 4.55	44.75	8	6-32 UNC	0.25	0.1	12

DIMENSIONS (mm are the original dimensions)

UNIT	A max.	A_2 max.	b	c	D max.	d max.	E max.	e	e_1	F	L min.	M	M_1	M_2	N	N_1 max.	N_2 max.	p	Q max.	q	q_1	q_2	R min.
mm	20.8	9.1	0.51 0.38	0.25	27.2	2.54	13.75	2.54	5.08	12.7	8.8	2.5	1.6	0.9	861 746	10.7	5	4.15 3.85	2.4	38.1	25.4	10.2	35

OUTLINE VERSION	REFERENCES				EUROPEAN PROJECTION	ISSUE DATE
	IEC	JEDEC	EIAJ			
SOT115Y						~~00-01-06~~ 01-08-10

DATA SHEET STATUS

LEVEL	DATA SHEET STATUS(1)	PRODUCT STATUS(2)(3)	DEFINITION
I	Objective data	Development	This data sheet contains data from the objective specification for product development. Philips Semiconductors reserves the right to change the specification in any manner without notice.
II	Preliminary data	Qualification	This data sheet contains data from the preliminary specification. Supplementary data will be published at a later date. Philips Semiconductors reserves the right to change the specification without notice, in order to improve the design and supply the best possible product.
III	Product data	Production	This data sheet contains data from the product specification. Philips Semiconductors reserves the right to make changes at any time in order to improve the design, manufacturing and supply. Relevant changes will be communicated via a Customer Product/Process Change Notification (CPCN).

Notes

1. Please consult the most recently issued data sheet before initiating or completing a design.
2. The product status of the device(s) described in this data sheet may have changed since this data sheet was published. The latest information is available on the Internet at URL http://www.semiconductors.philips.com.
3. For data sheets describing multiple type numbers, the highest-level product status determines the data sheet status.

DEFINITIONS

Short-form specification — The data in a short-form specification is extracted from a full data sheet with the same type number and title. For detailed information see the relevant data sheet or data handbook.

Limiting values definition — Limiting values given are in accordance with the Absolute Maximum Rating System (IEC 60134). Stress above one or more of the limiting values may cause permanent damage to the device. These are stress ratings only and operation of the device at these or at any other conditions above those given in the Characteristics sections of the specification is not implied. Exposure to limiting values for extended periods may affect device reliability.

Application information — Applications that are described herein for any of these products are for illustrative purposes only. Philips Semiconductors make no representation or warranty that such applications will be suitable for the specified use without further testing or modification.

DISCLAIMERS

Life support applications — These products are not designed for use in life support appliances, devices, or systems where malfunction of these products can reasonably be expected to result in personal injury. Philips Semiconductors customers using or selling these products for use in such applications do so at their own risk and agree to fully indemnify Philips Semiconductors for any damages resulting from such application.

Right to make changes — Philips Semiconductors reserves the right to make changes in the products - including circuits, standard cells, and/or software - described or contained herein in order to improve design and/or performance. When the product is in full production (status ‘Production’), relevant changes will be communicated via a Customer Product/Process Change Notification (CPCN). Philips Semiconductors assumes no responsibility or liability for the use of any of these products, conveys no licence or title under any patent, copyright, or mask work right to these products, and makes no representations or warranties that these products are free from patent, copyright, or mask work right infringement, unless otherwise specified.

NOTES

NOTES

NOTES

Philips Semiconductors – a worldwide company

Contact information

For additional information please visit **http://www.semiconductors.philips.com**. Fax: **+31 40 27 24825**
For sales offices addresses send e-mail to: **sales.addresses@www.semiconductors.philips.com**.

© Koninklijke Philips Electronics N.V. 2002 SCA74

All rights are reserved. Reproduction in whole or in part is prohibited without the prior written consent of the copyright owner.

The information presented in this document does not form part of any quotation or contract, is believed to be accurate and reliable and may be changed without notice. No liability will be accepted by the publisher for any consequence of its use. Publication thereof does not convey nor imply any license under patent- or other industrial or intellectual property rights.

Printed in The Netherlands 613518/04/pp12 Date of release: 2002 Dec 03 Document order number: 9397 750 10521

Let's make things better.

Philips
Semiconductors

PHILIPS