NPN Silicon RF Transistor

- For broadband amplifiers up to 2GHz and fast non-saturated switches at collector currents from 0.5 mA to 20 mA
- Complementary type: BFT92 (PNP)
- CECC-type available: CECC 50002/249

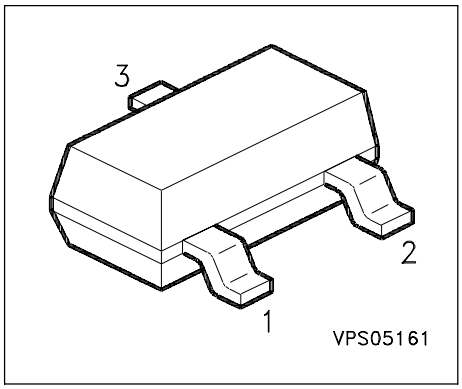

ESD: **E**lectro**s**tatic **d**ischarge sensitive device, observe handling precaution!

Type	Marking	Ordering Code	Pin Configuration			Package
BFR 92P	GFs	Q62702-F1050	1 = B	2 = E	3 = C	SOT-23

Maximum Ratings

Parameter	Symbol	Values	Unit
Collector-emitter voltage	V_{CEO}	15	V
Collector-emitter voltage	V_{CES}	20	
Collector-base voltage	V_{CBO}	20	
Emitter-base voltage	V_{EBO}	2.5	
Collector current	I_C	30	mA
Base current	I_B	4	
Total power dissipation $T_S \leq 48$ °C	P_{tot}	280	mW
Junction temperature	T_j	150	°C
Ambient temperature	T_A	- 65 ... + 150	
Storage temperature	T_{stg}	- 65 ... + 150	
Thermal Resistance			
Junction - soldering point 1)	R_{thJS}	≤ 365	K/W

1) T_S is measured on the collector lead at the soldering point to the pcb.

Electrical Characteristics at T_A = 25°C, unless otherwise specified.

Parameter	Symbol	Values			Unit
		min.	typ.	max.	
DC Characteristics					
Collector-emitter breakdown voltage I_C = 1 mA, I_B = 0	$V_{(BR)CEO}$	15	-	-	V
Collector-emitter cutoff current V_{CE} = 20 V, V_{BE} = 0	I_{CES}	-	-	10	µA
Collector-base cutoff current V_{CB} = 10 V, I_E = 0	I_{CBO}	-	-	100	nA
Emitter-base cutoff current V_{EB} = 2.5 V, I_C = 0	I_{EBO}	-	-	100	µA
DC current gain I_C = 15 mA, V_{CE} = 8 V	h_{FE}	40	100	200	-

Electrical Characteristics at T_A = 25°C, unless otherwise specified.

Parameter	Symbol	Values			Unit
		min.	typ.	max.	
AC Characteristics					
Transition frequency I_C = 15 mA, V_{CE} = 8 V, f = 500 MHz	f_T	 3.5	 5	 -	GHz
Collector-base capacitance V_{CB} = 10 V, f = 1 MHz	C_{cb}	 -	 0.38	 0.6	pF
Collector-emitter capacitance V_{CE} = 10 V, f = 1 MHz	C_{ce}	 -	 0.2	 -	
Emitter-base capacitance V_{EB} = 0.5 V, f = 1 MHz	C_{eb}	 -	 0.7	 -	
Noise figure I_C = 2 mA, V_{CE} = 6 V, Z_S = Z_{Sopt} f = 900 MHz f = 1.8 GHz	F	 - -	 1.8 2.9	 - -	dB
Power gain [2)] I_C = 15 mA, V_{CE} = 8 V, Z_S = Z_{Sopt} Z_L = Z_{Lopt} f = 900 MHz f = 1.8 GHz	G_{ma}	 - -	 15 9.5	 - -	
Transducer gain I_C = 15 mA, V_{CE} = 8 V, Z_S =Z_L= 50 Ω f = 900 MHz f = 1.8 GHz	$\lvert S_{21e}\rvert^2$	 - -	 12.5 7	 - -	

2) $G_{ma} = |S_{21}/S_{12}|\ (k-(k^2-1)^{1/2})$

SPICE Parameters (Gummel-Poon Model, Berkeley-SPICE 2G.6 Syntax) :

Transistor Chip Data

IS =	0.1213	fA	BF =	94.733	-	NF =	1.0947	-
VAF =	30	V	IKF =	0.46227	A	ISE =	129.55	fA
NE =	1.9052	-	BR =	10.729	-	NR =	0.8983	-
VAR =	14.599	V	IKR =	0.01	A	ISC =	0.75557	fA
NC =	1.371	-	RB =	14.998	Ω	IRB =	0.01652	mA
RBM =	7.8145	Ω	RE =	0.29088	Ω	RC =	0.13793	Ω
CJE =	10.416	fF	VJE =	0.70618	V	MJE =	0.34686	-
TF =	26.796	ps	XTF =	0.3817	-	VTF =	0.32861	V
ITF =	4.4601	mA	PTF =	0	deg	CJC =	946.47	fF
VJC =	0.84079	V	MJC =	0.4085	-	XCJC =	0.13464	-
TR =	1.2744	ns	CJS =	0	fF	VJS =	0.75	V
MJS =	0	-	XTB =	0	-	EG =	1.11	eV
XTI =	3	-	FC =	0.99545	-	TNOM	300	K

All parameters are ready to use, no scalling is necessary.
Extracted on behalf of SIEMENS Small Signal Semiconductors by:
Institut für Mobil-und Satellitenfunktechnik (IMST)
© 1996 SIEMENS AG

Package Equivalent Circuit:

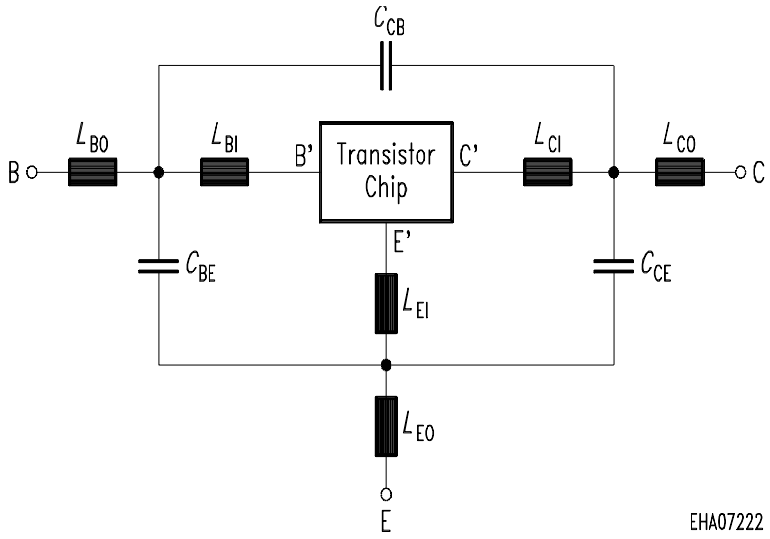

LBI =	0.85	nH
LBO =	0.51	nH
LEI =	0.69	nH
LEO =	0.61	nH
LCI =	0	nH
LCO =	0.49	nH
CBE =	73	fF
CCB =	84	fF
CCE =	165	fF

Valid up to 6 GHz

For examples and ready to use parameters please contact your local Siemens distributor or sales office to obtain a Siemens CD-ROM or see Internet: http://www.siemens.de/Semiconductor/products/35/35.htm

Total power dissipation $P_{tot} = f(T_A^*, T_S)$

* Package mounted on epoxy

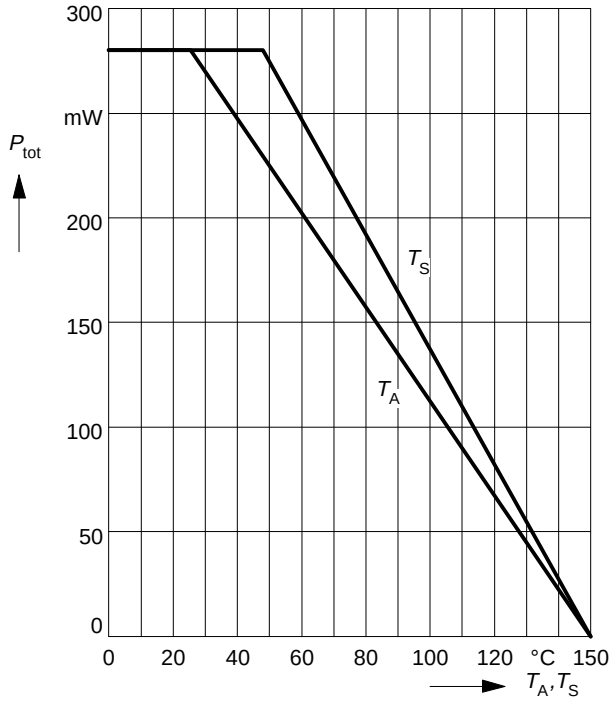

Permissible Pulse Load $R_{thJS} = f(t_p)$

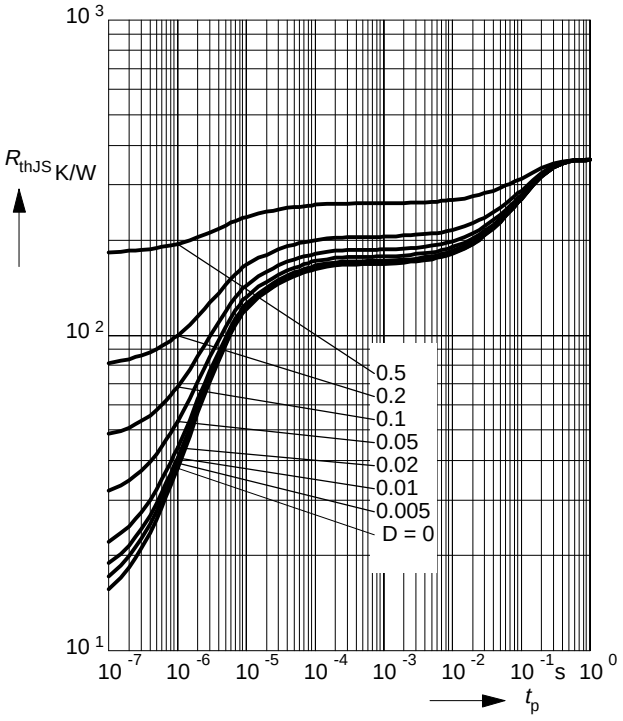

Permissible Pulse Load $P_{totmax}/P_{totDC} = f(t_p)$

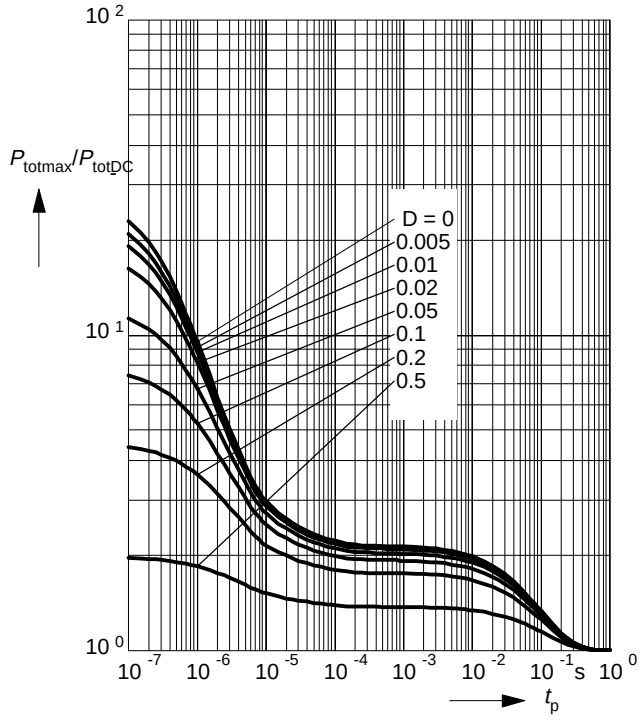

Collector-base capacitance $C_{cb} = f(V_{CB})$
$V_{BE} = v_{be} = 0$, $f = 1$MHz

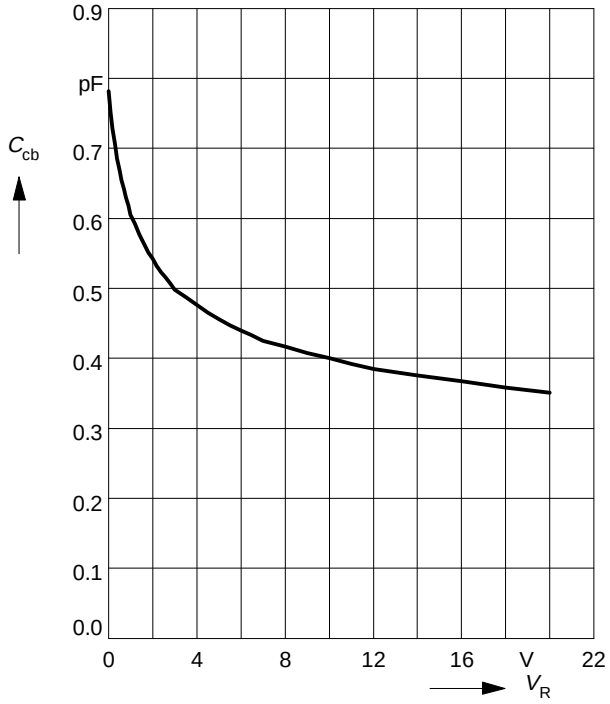

Transition frequency $f_T = f(I_C)$

V_{CE} = Parameter

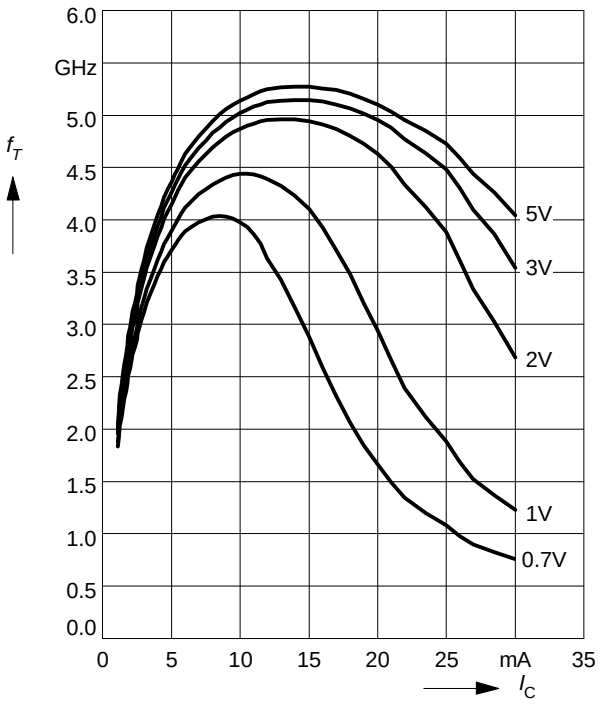

Power Gain G_{ma}, $G_{ms} = f(I_C)$
$f = 0.9$GHz
V_{CE} = Parameter

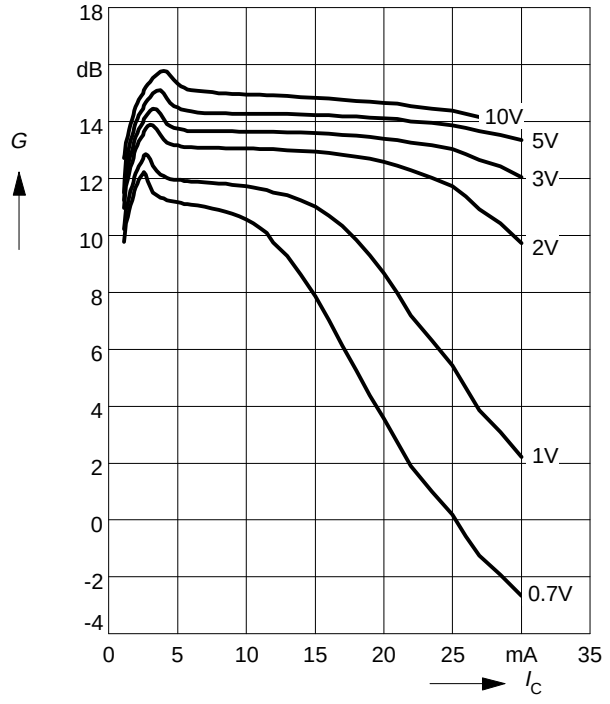

Power Gain G_{ma}, $G_{ms} = f(I_C)$
$f = 1.8$GHz
V_{CE} = Parameter

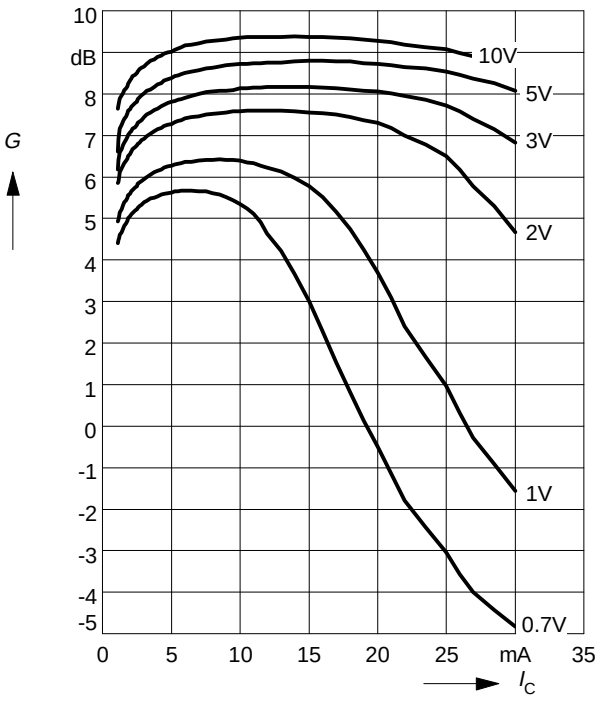

Power Gain G_{ma}, G_{ms} = $f(V_{CE})$:_____
$|S_{21}|^2$ = $f(V_{CE})$:---------
f = Parameter

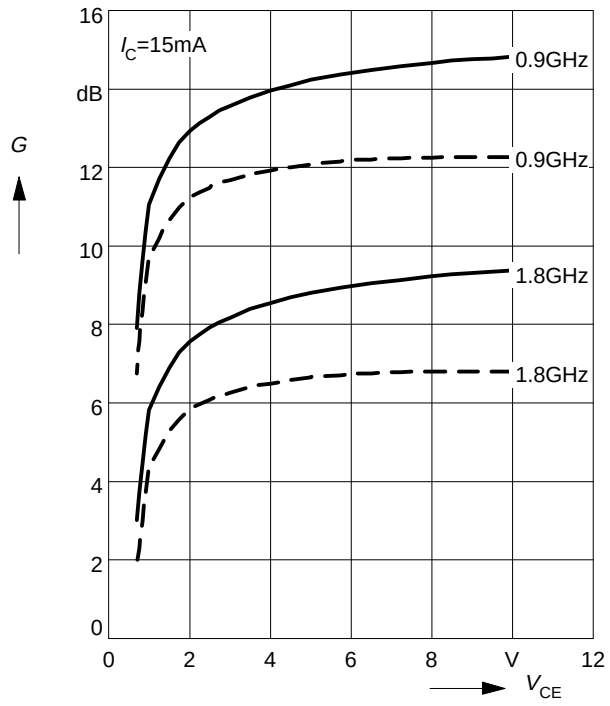

Intermodulation Intercept Point IP_3=$f(I_C)$
(3rd order, Output, Z_S=Z_L=50Ω)
V_{CE} = Parameter, f = 900MHz

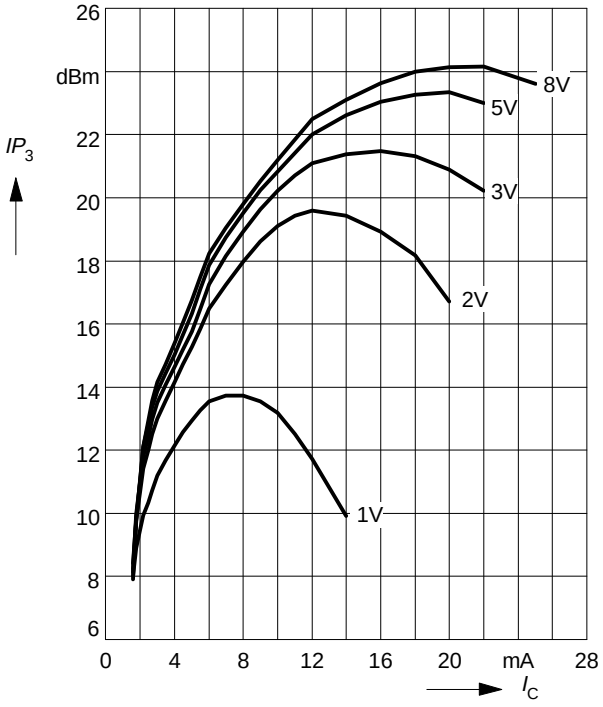

Power Gain G_{ma}, G_{ms} = $f(f)$

V_{CE} = Parameter

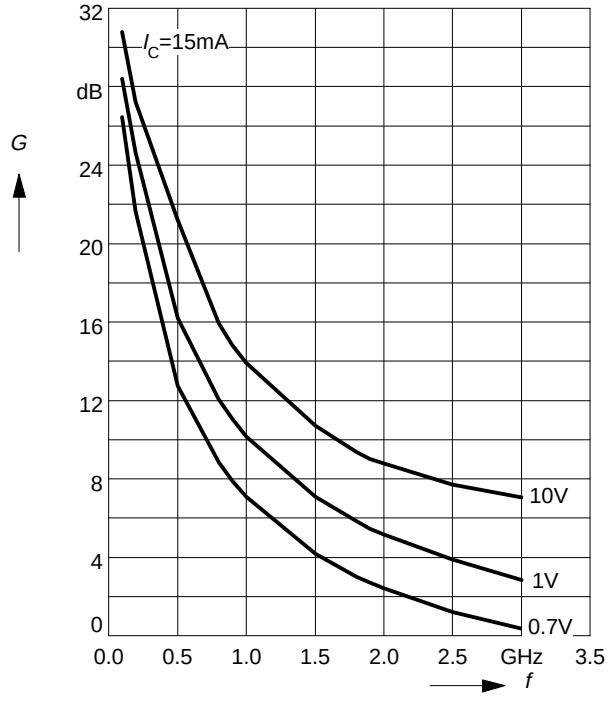

Power Gain $|S_{21}|^2$= $f(f)$

V_{CE} = Parameter

