**NPN Silicon RF Transistor**

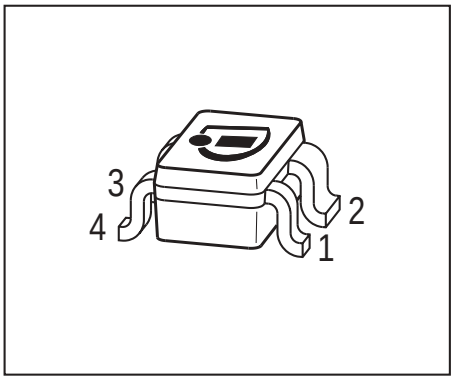


- For high gain low noise amplifiers
- For oscillators up to 10 GHz
- Noise figure $F$ = 1.1 dB at 1.8 GHz
  outstanding $G_{ms}$ = 21 dB at 1.8 GHz
- Transition frequency $f_T$ = 25 GHz
- Gold metallization for high reliability
- SIEGET ® 25 GHz fT - Line
- Pb-free (RoHS compliant) package[1)]
- Qualified according AEC Q101

AEC Qualified RoHS

**ESD** (**E**lectro**s**tatic **d**ischarge) sensitive device, observe handling precaution!

| Type | Marking | Pin Configuration | | | | | | Package |
|---|---|---|---|---|---|---|---|---|
| BFP420 | AMs | 1=B | 2=E | 3=C | 4=E | - | - | SOT343 |

**Maximum Ratings**

| Parameter | Symbol | Value | Unit |
|---|---|---|---|
| Collector-emitter voltage | $V_{CEO}$ | | V |
| $T_A$ > 0 °C | | 4.5 | |
| $T_A$ ≤ 0 °C | | 4.1 | |
| Collector-emitter voltage | $V_{CES}$ | 15 | |
| Collector-base voltage | $V_{CBO}$ | 15 | |
| Emitter-base voltage | $V_{EBO}$ | 1.5 | |
| Collector current | $I_C$ | 35 | mA |
| Base current | $I_B$ | 3 | |
| Total power dissipation[2)] $T_S$ ≤ 107 °C | $P_{tot}$ | 160 | mW |
| Junction temperature | $T_j$ | 150 | °C |
| Ambient temperature | $T_A$ | -65 ... 150 | |
| Storage temperature | $T_{stg}$ | -65 ... 150 | |

[1]Pb-containing package may be available upon special request
[2]$T_S$ is measured on the collector lead at the soldering point to the pcb

2007-04-20

## Thermal Resistance

| Parameter | Symbol | Value | Unit |
|---|---|---|---|
| Junction - soldering point[1)] | $R_{thJS}$ | ≤ 260 | K/W |

**Electrical Characteristics** at $T_A$ = 25°C, unless otherwise specified

| Parameter | Symbol | Values | | | Unit |
|---|---|---|---|---|---|
| | | min. | typ. | max. | |
| **DC Characteristics** | | | | | |
| Collector-emitter breakdown voltage<br>$I_C$ = 1 mA, $I_B$ = 0 | $V_{(BR)CEO}$ | 4.5 | 5 | - | V |
| Collector-emitter cutoff current<br>$V_{CE}$ = 15 V, $V_{BE}$ = 0 | $I_{CES}$ | - | - | 10 | µA |
| Collector-base cutoff current<br>$V_{CB}$ = 5 V, $I_E$ = 0 | $I_{CBO}$ | - | - | 100 | nA |
| Emitter-base cutoff current<br>$V_{EB}$ = 0.5 V, $I_C$ = 0 | $I_{EBO}$ | - | - | 3 | µA |
| DC current gain<br>$I_C$ = 20 mA, $V_{CE}$ = 4 V, pulse measured | $h_{FE}$ | 60 | 95 | 130 | - |

[1]For calculation of $R_{thJA}$ please refer to Application Note Thermal Resistance

**Electrical Characteristics** at $T_A$ = 25°C, unless otherwise specified

| Parameter | Symbol | Values | | | Unit |
|---|---|---|---|---|---|
| | | min. | typ. | max. | |
| **AC Characteristics** (verified by random sampling) | | | | | |
| Transition frequency<br>$I_C$ = 30 mA, $V_{CE}$ = 3 V, $f$ = 2 GHz | $f_T$ | 18 | 25 | - | GHz |
| Collector-base capacitance<br>$V_{CB}$ = 2 V, $f$ = 1 MHz, $V_{BE}$ = 0 ,<br>emitter grounded | $C_{cb}$ | - | 0.15 | 0.3 | pF |
| Collector emitter capacitance<br>$V_{CE}$ = 2 V, $f$ = 1 MHz, $V_{BE}$ = 0 ,<br>base grounded | $C_{ce}$ | - | 0.37 | - | |
| Emitter-base capacitance<br>$V_{EB}$ = 0.5 V, $f$ = 1 MHz, $V_{CB}$ = 0 ,<br>collector grounded | $C_{eb}$ | - | 0.55 | - | |
| Noise figure<br>$I_C$ = 5 mA, $V_{CE}$ = 2 V, $f$ = 1.8 GHz, $Z_S = Z_{Sopt}$ | $F$ | - | 1.1 | - | dB |
| Power gain, maximum stable[1)]<br>$I_C$ = 20 mA, $V_{CE}$ = 2 V, $Z_S = Z_{Sopt}$,<br>$Z_L = Z_{Lopt}$ , $f$ = 1.8 GHz | $G_{ms}$ | - | 21 | - | dB |
| Insertion power gain<br>$V_{CE}$ = 2 V, $I_C$ = 20 mA, $f$ = 1.8 GHz,<br>$Z_S = Z_L$ = 50 Ω | $\lvert S_{21}\rvert^2$ | 14 | 17 | - | |
| Third order intercept point at output[2)]<br>$V_{CE}$ = 2 V, $I_C$ = 20 mA, $f$ = 1.8 GHz,<br>$Z_S = Z_L$ = 50 Ω | $IP_3$ | - | 22 | - | dBm |
| 1dB Compression point at output<br>$I_C$ = 20 mA, $V_{CE}$ = 2 V, $Z_S = Z_L$ = 50 Ω,<br>$f$ = 1.8 GHz | $P_{-1dB}$ | - | 12 | - | |

[1] $G_{ms} = \lvert S_{21} / S_{12}\rvert$

[2] IP3 value depends on termination of all intermodulation frequency components.
Termination used for this measurement is 50Ω from 0.1 MHz to 6 GHz

## SPICE Parameter (Gummel-Poon Model, Berkley-SPICE 2G.6 Syntax):

### Transistor Chip Data:

| | | | | | | | | |
|---|---|---|---|---|---|---|---|---|
| IS = | 0.20045 | fA | BF = | 72.534 | - | NF = | 1.2432 | - |
| VAF = | 28.383 | V | IKF = | 0.48731 | A | ISE = | 19.049 | fA |
| NE = | 2.0518 | - | BR = | 7.8287 | - | NR = | 1.3325 | - |
| VAR = | 19.705 | V | IKR = | 0.69141 | mA | ISC = | 0.019237 | fA |
| NC = | 1.1724 | - | RB = | 8.5757 | Ω | IRB = | 0.72983 | mA |
| RBM = | 3.4849 | Ω | RE = | 0.31111 | - | RC = | 0.10105 | Ω |
| CJE = | 1.8063 | fF | VJE = | 0.8051 | V | MJE = | 0.46576 | - |
| TF = | 6.7661 | ps | XTF = | 0.42199 | - | VTF = | 0.23794 | V |
| ITF = | 1 | mA | PTF = | 0 | deg | CJC = | 234.53 | fF |
| VJC = | 0.81696 | V | MJC = | 0.30232 | - | XCJC = | 0.3 | - |
| TR = | 2.3249 | ns | CJS = | 0 | fF | VJS = | 0.75 | V |
| MJS = | 0 | - | XTB = | 0 | - | EG = | 1.11 | eV |
| XTI = | 3 | - | FC = | 0.73234 | | TNOM | 300 | K |

**C`-E`-dioden Data (Berkley-Spice 1G.6 Syntax):** IS = 3.5 fA; N = 1.02 -, RS = 10 Ω

All parameters are ready to use, no scalling is necessary.

### Package Equivalent Circuit:

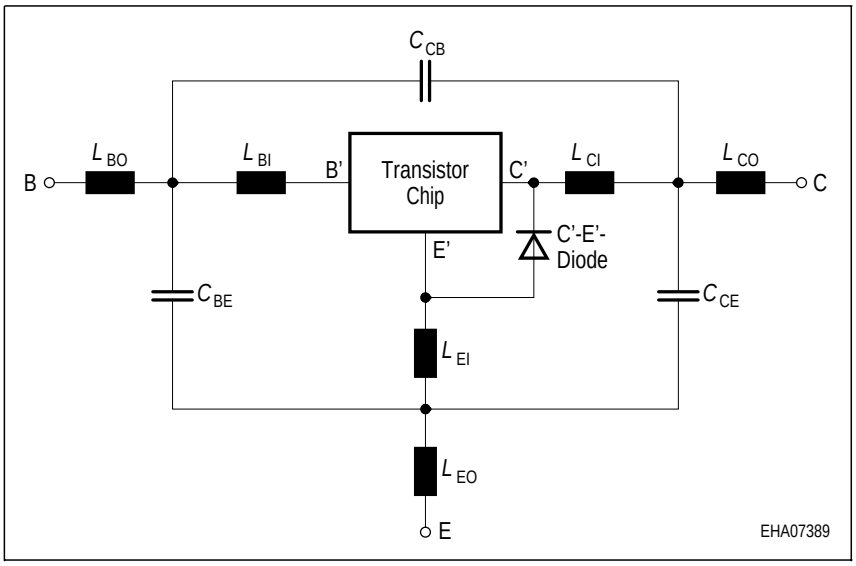


| | | |
|---|---|---|
| $L_{BI}$ = | 0.47 | nH |
| $L_{BO}$ = | 0.53 | nH |
| $L_{EI}$= | 0.23 | nH |
| $L_{EO}$ = | 0.05 | nH |
| $L_{CI}$ = | 0.56 | nH |
| $L_{CO}$ = | 0.58 | nH |
| $C_{BE}$ = | 136 | fF |
| $C_{CB}$ = | 6.9 | fF |
| $C_{CE}$ = | 134 | fF |

Valid up to 6GHz

The SOT343 package has two emitter leads. To avoid high complexity to the package equivalent circuit both leads are combined in one electrical connection

Extracted on behalf of Infineon Technologies AG by: Institut für Mobil- und Satellitentechnik (IMST)

For examples and ready to use parameters please contact your local Infineon Technologies distributor or sales office to obtain a InfineonTechnologies CD-ROM or see Internet: http//www.infineon.com/silicondiscretes

**For non-linear simulation:**

· Use transistor chip parameters in Berkeley SPICE 2G.6 syntax for all simulators.

· If you need simulation of the reverse characteristics, add the diode with the C'-E'- diode data between collector and emitter.

· Simulation of package is not necessary for frequencies < 100MHz. For higher frequencies add the wiring of package equivalent circuit around the non-linear transistor and diode model.

**Note:**

· This transistor is constructed in a common emitter configuration. This feature causes an additional reverse biased diode between emitter and collector, which does not effect normal operation.

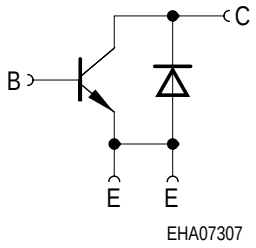


**Transistor Schematic Diagram**

The common emitter configuration shows the following advantages:

· Higher gain because of lower emitter inductance.
· Power is dissipated via the grounded emitter leads, because the chip is mounted on copper emitter leadframe.

Please note, that the broadest lead is the emitter lead.

**Common Emitter S- and Noise-parameter**

For detailed S- and Noise-parameters please contact your local Infineon Technologies distributor or sales office to obtain a Infineon Technologies Application Notes CD-ROM or see Internet: http://www.infineon.com/silicondiscretes

**Total power dissipation** $P_{tot} = f(T_S)$

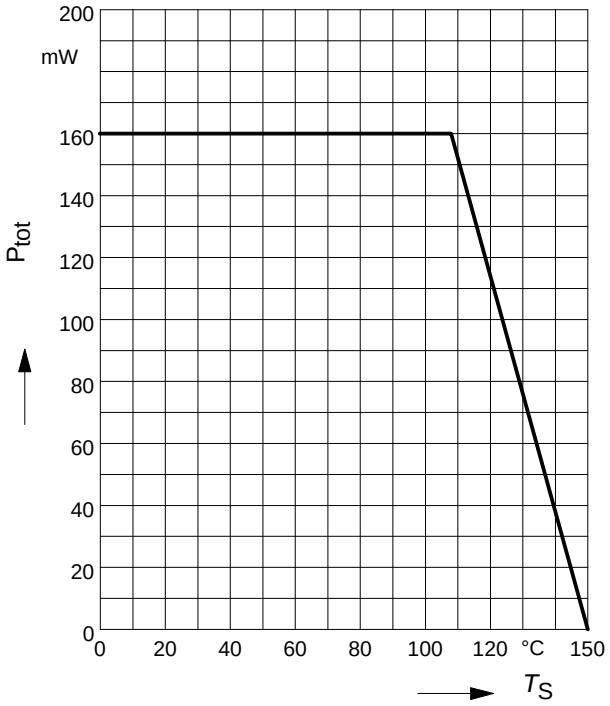


**Permissible Pulse Load** $R_{thJS} = f(t_p)$

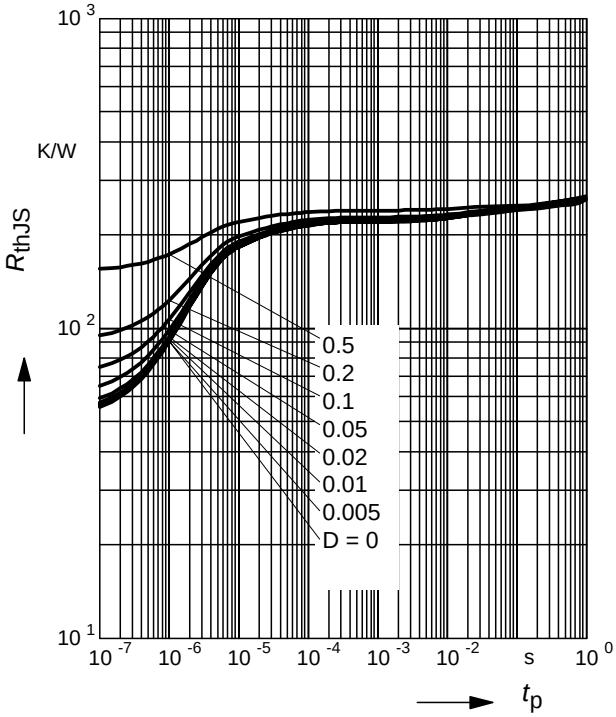


**Permissible Pulse Load**

$P_{totmax}/P_{totDC} = f(t_p)$

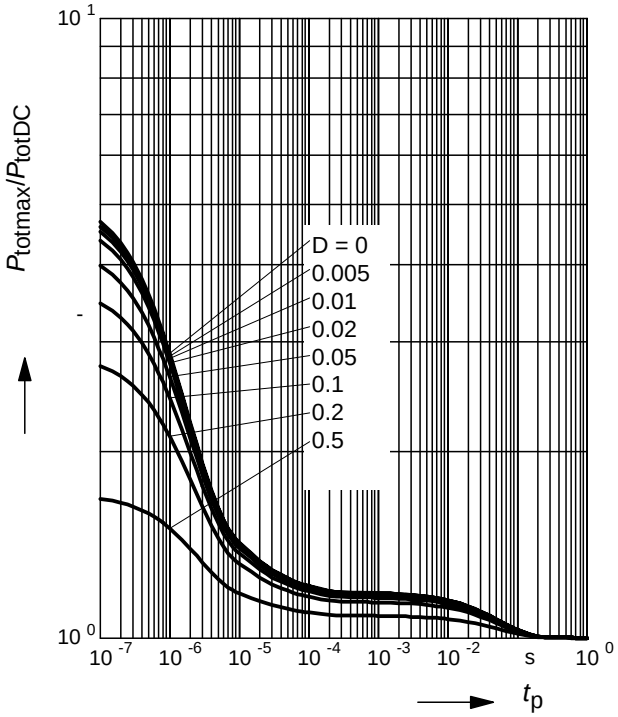


**Collector-base capacitance** $C_{cb} = f(V_{CB})$

$f$ = 1MHz

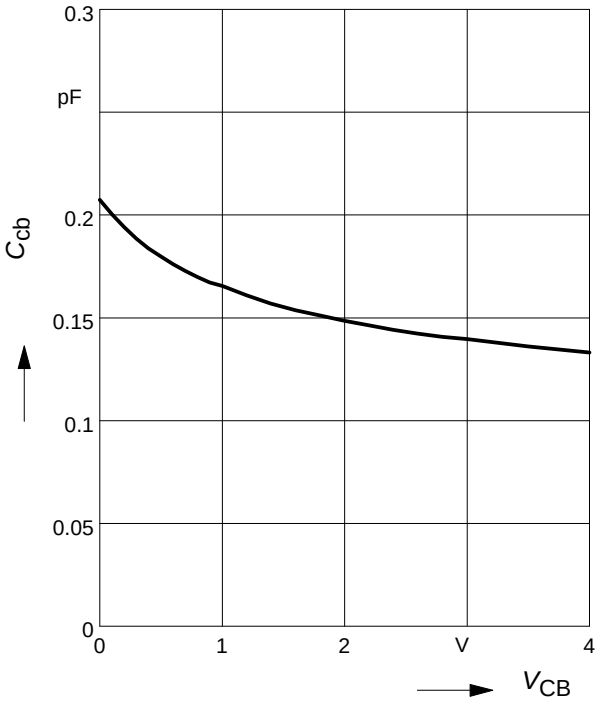


2007-04-20

**Transition frequency** $f_T = f(I_C)$

$f$ = 2 GHz

$V_{CE}$ = parameter in V

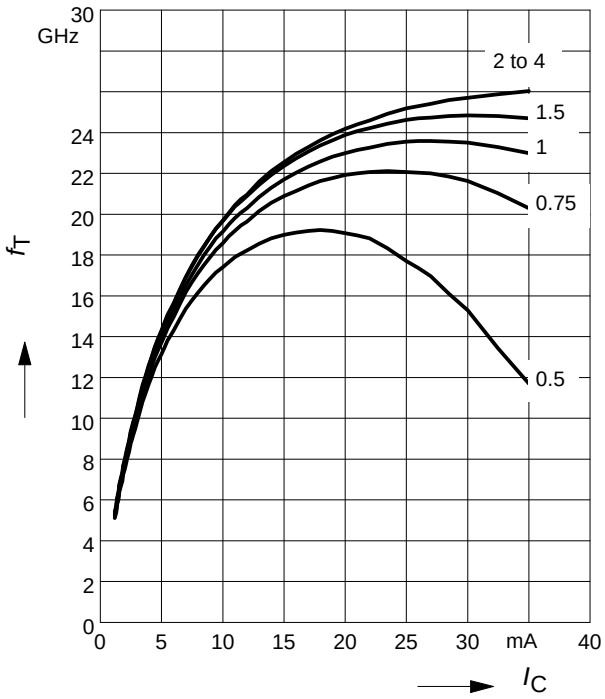


**Power gain** $G_{ma}$, $G_{ms}$, $|S_{21}|^2 = f(f)$

$V_{CE}$ = 2 V, $I_C$ = 20 mA

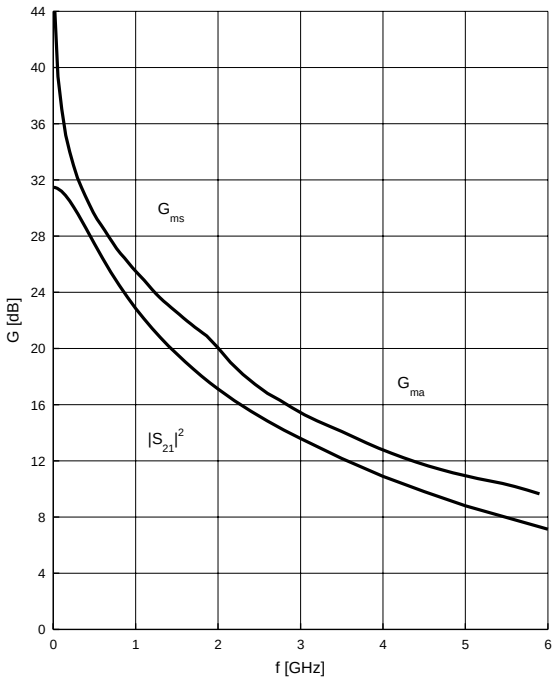


**Power gain** $G_{ma}$, $G_{ms} = f(I_C)$

$V_{CE}$ = 2V

$f$ = parameter in GHz

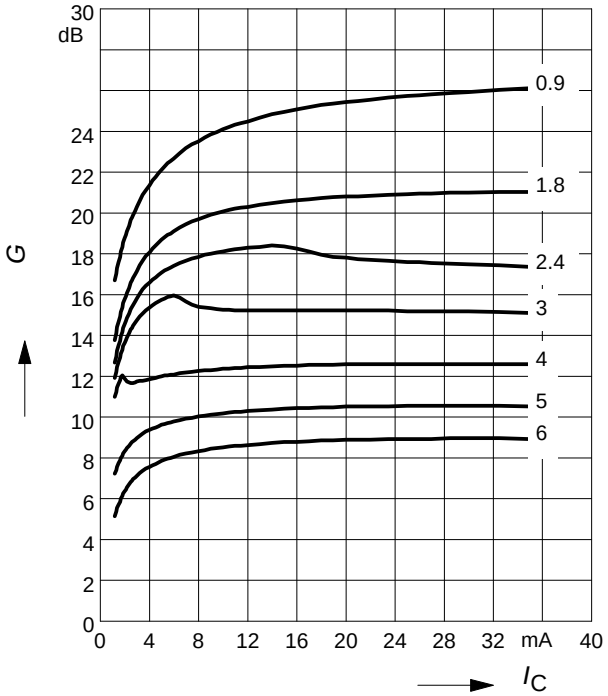


**Power gain** $G_{ma}$, $G_{ms} = f(V_{CE})$

$I_C$ = 20 mA

$f$ = parameter in GHz

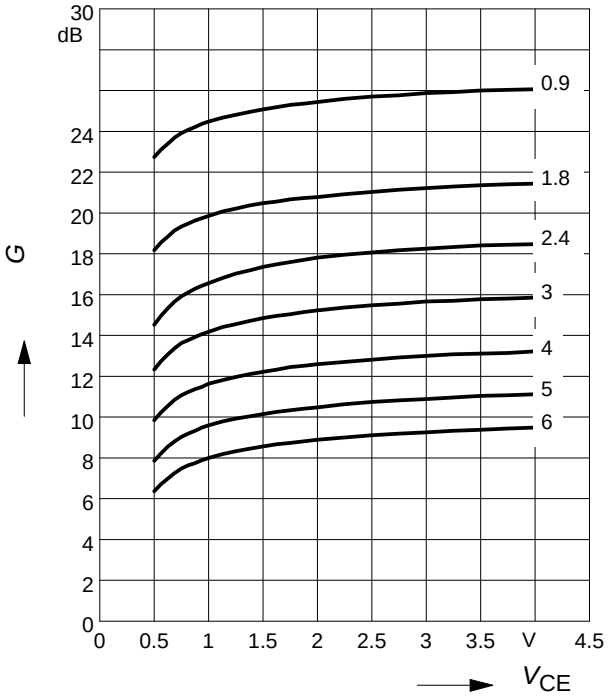

**Noise figure** $F = f(I_C)$

$V_{CE}$ = 2 V, $Z_S = Z_{Sopt}$

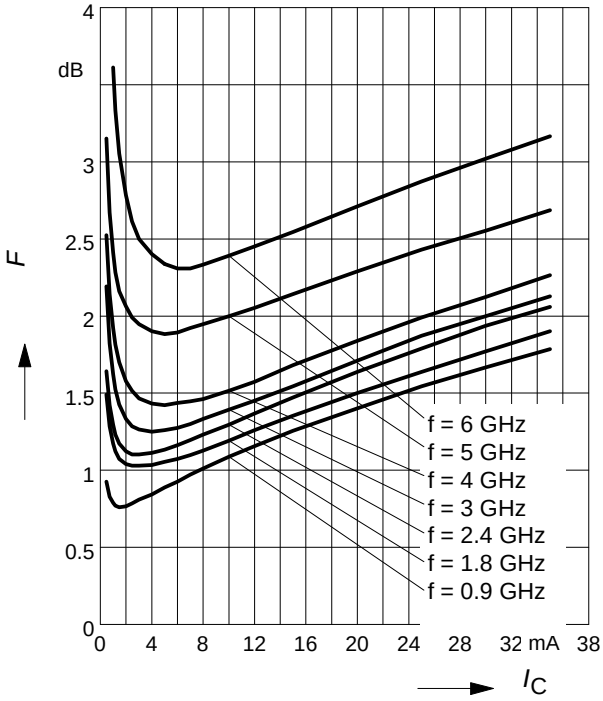


**Noise figure** $F = f(I_C)$

$V_{CE}$ = 2 V, $f$ = 1.8 GHz

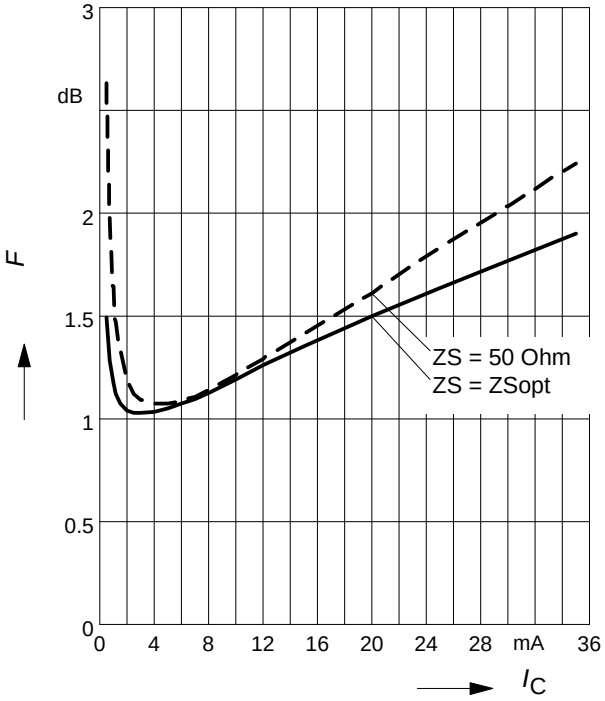


**Noise figure** $F = f(f)$

$V_{CE}$ = 2 V, $Z_S = Z_{Sopt}$

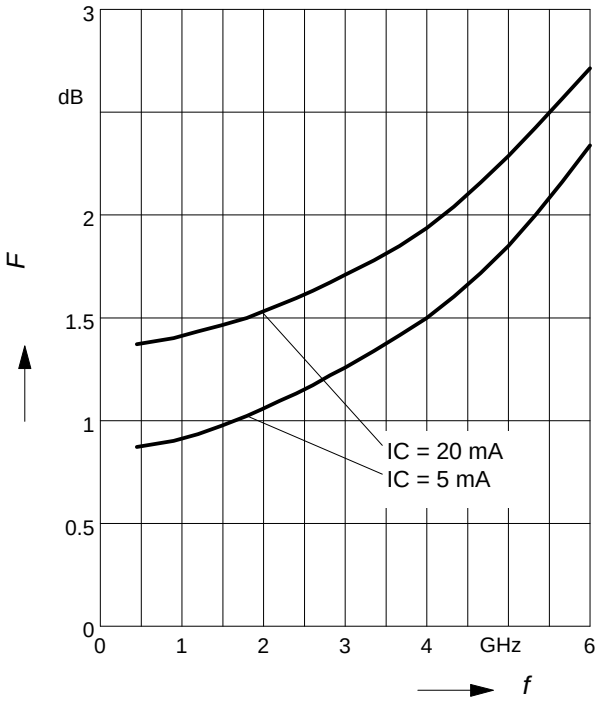


**Source impedance** for min. noise figure vs. frequency

$V_{CE}$ = 2 V, $I_C$ = 5 mA / 20 mA

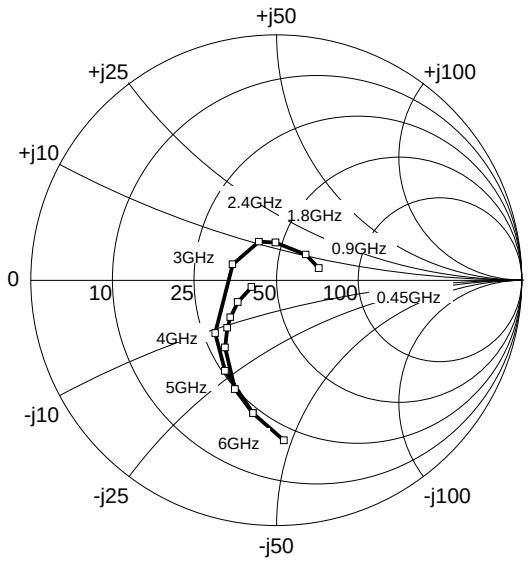

## Package Outline



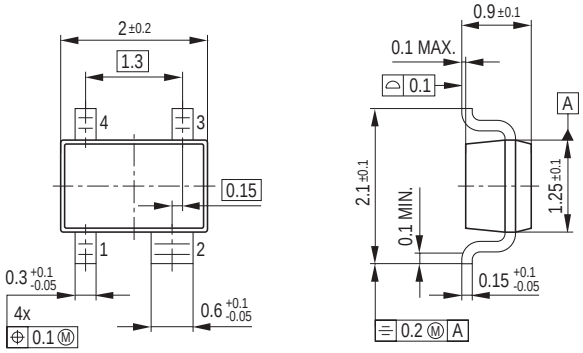


## Foot Print

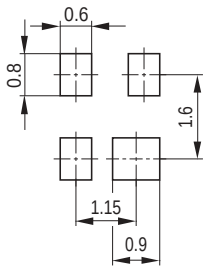


## Marking Layout (Example)

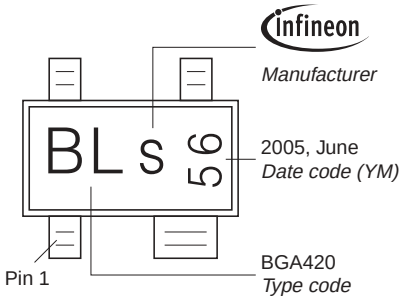


## Standard Packing

Reel ø180 mm = 3.000 Pieces/Reel
Reel ø330 mm = 10.000 Pieces/Reel

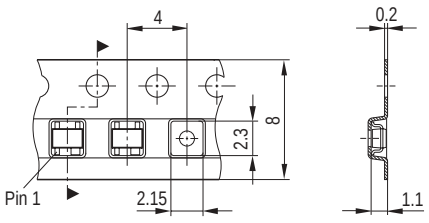


2007-04-20

Edition 2006-02-01
Published by
Infineon Technologies AG
81726 München, Germany
© Infineon Technologies AG 2007.
All Rights Reserved.

**Attention please!**

The information given in this dokument shall in no event be regarded as a guarantee of conditions or characteristics (“Beschaffenheitsgarantie”). With respect to any examples or hints given herein, any typical values stated herein and/or any information regarding the application of the device, Infineon Technologies hereby disclaims any and all warranties and liabilities of any kind, including without limitation warranties of non-infringement of intellectual property rights of any third party.

**Information**

For further information on technology, delivery terms and conditions and prices please contact your nearest Infineon Technologies Office (**www.infineon.com**).

**Warnings**

Due to technical requirements components may contain dangerous substances. For information on the types in question please contact your nearest Infineon Technologies Office.
Infineon Technologies Components may only be used in life-support devices or systems with the express written approval of Infineon Technologies, if a failure of such components can reasonably be expected to cause the failure of that life-support device or system, or to affect the safety or effectiveness of that device or system.
Life support devices or systems are intended to be implanted in the human body, or to support and/or maintain and sustain and/or protect human life. If they fail, it is reasonable to assume that the health of the user or other persons may be endangered.