NPN Silicon RF Transistor*

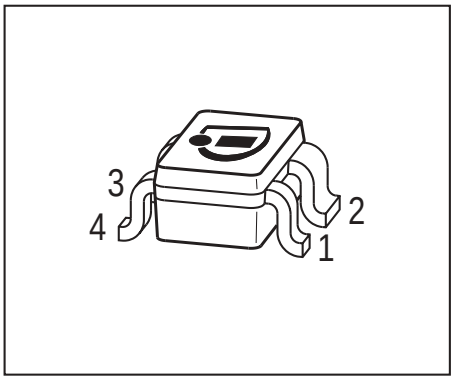

- For low noise, low distortion broadband amplifiers in antenna and telecommunications systems up to 1.5 GHz at collector currents from 20 mA to 80 mA
- Power amplifier for DECT and PCN systems
- f_T = 7.5 GHz, F = 1.3 dB at 900 MHz
- Pb-free (RoHS compliant) package[1)]
- Qualified according AEC Q101

* Short term description

AEC Qualified RoHS

ESD (**E**lectro**s**tatic **d**ischarge) sensitive device, observe handling precaution!

Type	Marking	Pin Configuration						Package
BFP196W	RIs	1 = E	2 = C	3 = E	4 = B	-	-	SOT343

Maximum Ratings

Parameter	Symbol	Value	Unit
Collector-emitter voltage	V_{CEO}	12	V
Collector-emitter voltage	V_{CES}	20	
Collector-base voltage	V_{CBO}	20	
Emitter-base voltage	V_{EBO}	2	
Collector current	I_C	150	mA
Base current	I_B	15	
Total power dissipation[2)] $T_S \leq 69°C$	P_{tot}	700	mW
Junction temperature	T_j	150	°C
Ambient temperature	T_A	-55 ... 150	
Storage temperature	T_{stg}	-55 ... 150	

Thermal Resistance

Parameter	Symbol	Value	Unit
Junction - soldering point[3)]	R_{thJS}	≤ 115	K/W

[1]Pb-containing package may be available upon special request
[2]T_S is measured on the collector lead at the soldering point to the pcb
[3]For calculation of R_{thJA} please refer to Application Note Thermal Resistance

2007-04-20

Electrical Characteristics at T_A = 25°C, unless otherwise specified

Parameter	Symbol	Values			Unit
		min.	typ.	max.	
DC Characteristics					
Collector-emitter breakdown voltage I_C = 1 mA, I_B = 0	$V_{(BR)CEO}$	12	-	-	V
Collector-emitter cutoff current V_{CE} = 20 V, V_{BE} = 0	I_{CES}	-	-	100	µA
Collector-base cutoff current V_{CB} = 10 V, I_E = 0	I_{CBO}	-	-	100	nA
Emitter-base cutoff current V_{EB} = 1 V, I_C = 0	I_{EBO}	-	-	1	µA
DC current gain- I_C = 50 mA, V_{CE} = 8 V, pulse measured	h_{FE}	70	100	140	-

Electrical Characteristics at T_A = 25°C, unless otherwise specified

Parameter	Symbol	Values			Unit
		min.	typ.	max.	
AC Characteristics (verified by random sampling)					
Transition frequency I_C = 70 mA, V_{CE} = 8 V, f = 500 MHz	f_T	5	7.5	-	GHz
Collector-base capacitance V_{CB} = 10 V, f = 1 MHz, V_{BE} = 0 , emitter grounded	C_{cb}	-	0.86	1.3	pF
Collector emitter capacitance V_{CE} = 10 V, f = 1 MHz, V_{BE} = 0 , base grounded	C_{ce}	-	0.4	-	
Emitter-base capacitance V_{EB} = 0.5 V, f = 1 MHz, V_{CB} = 0 , collector grounded	C_{eb}	-	3.9	-	
Noise figure I_C = 20 mA, V_{CE} = 8 V, Z_S = Z_{Sopt} , f = 900 MHz I_C = 20 mA, V_{CE} = 8 V, Z_S = Z_{Sopt} , f = 1.8 GHz	F	 - -	 1.3 2.3	 - -	dB
Power gain, maximum available[1)] I_C = 50 mA, V_{CE} = 8 V, Z_S = Z_{Sopt} , Z_L = Z_{Lopt} , f = 900 MHz I_C = 50 mA, V_{CE} = 8 V, Z_S = Z_{Sopt} , Z_L = Z_{Lopt} , f = 1.8 GHz	G_{ma}	 - -	 19 12.5	 - -	
Transducer gain I_C = 50 mA, V_{CE} = 8 V, Z_S = Z_L = 50Ω , f = 900 MHz I_C = 50 mA, V_{CE} = 8 V, Z_S = Z_L = 50Ω , f = 1.8 GHz	$\lvert S_{21e}\rvert^2$	 - -	 13 7	 - -	dB

[1] $G_{ma} = |S_{21} / S_{12}| (k-(k^2-1)^{1/2})$

SPICE Parameter (Gummel-Poon Model, Berkley-SPICE 2G.6 Syntax):

Transistor Chip Data:

IS =	1.7264	fA	BF =	125	-	NF =	0.80012	-
VAF =	20	V	IKF =	0.4294	A	ISE =	119.22	fA
NE =	1.1766	-	BR =	10.584	-	NR =	0.94288	-
VAR =	3.8128	V	IKR =	0.019551	A	ISC =	4.8666	fA
NC =	0.88299	-	RB =	1.2907	Ω	IRB =	0.084011	mA
RBM =	1	Ω	RE =	0.75103	-	RC =	0.27137	Ω
CJE =	13.325	fF	VJE =	0.7308	V	MJE =	0.33018	-
TF =	23.994	ps	XTF =	0.44322	-	VTF =	0.1	V
ITF =	1.9775	mA	PTF =	0	deg	CJC =	1667	fF
VJC =	0.73057	V	MJC =	0.3289	-	XCJC =	0.29998	-
TR =	2.2413	ns	CJS =	0	fF	VJS =	0.75	V
MJS =	0	-	NK =	0	-	EG =	1.11	eV
XTI =	3	-	FC =	0.50922		TNOM	300	K

All parameters are ready to use, no scalling is necessary. Extracted on behalf of Infineon Technologies AG by: Institut für Mobil- und Satellitentechnik (IMST)

Package Equivalent Circuit:

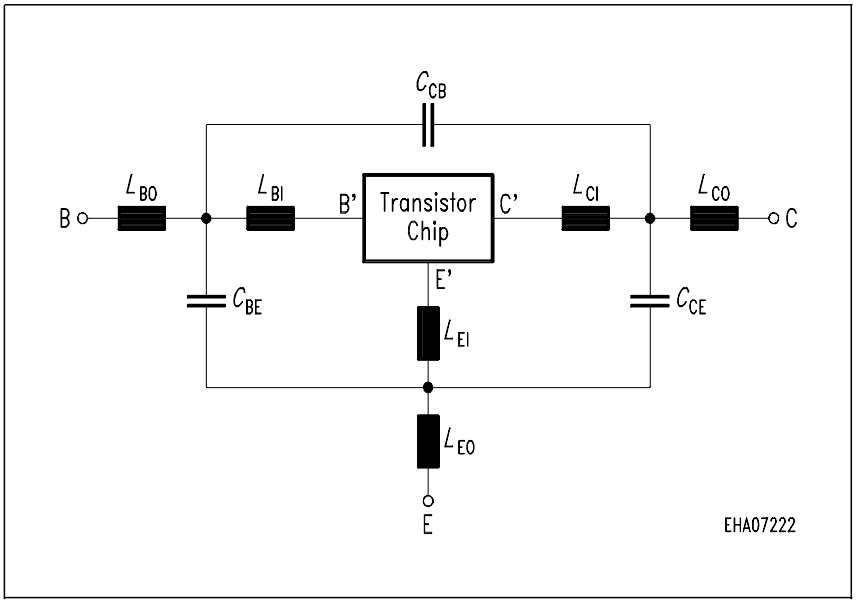

L_{BI} =	0.43	nH
L_{BO} =	0.47	nH
L_{EI} =	0.26	nH
L_{EO} =	0.12	nH
L_{CI} =	0.06	nH
L_{CO} =	0.36	nH
C_{BE} =	68	fF
C_{CB} =	46	fF
C_{CE} =	232	fF

Valid up to 6GHz

For examples and ready to use parameters please contact your local Infineon Technologies distributor or sales office to obtain a Infineon Technologies CD-ROM or see Internet: http://www.infineon.com

Total power dissipation $P_{tot} = f(T_S)$

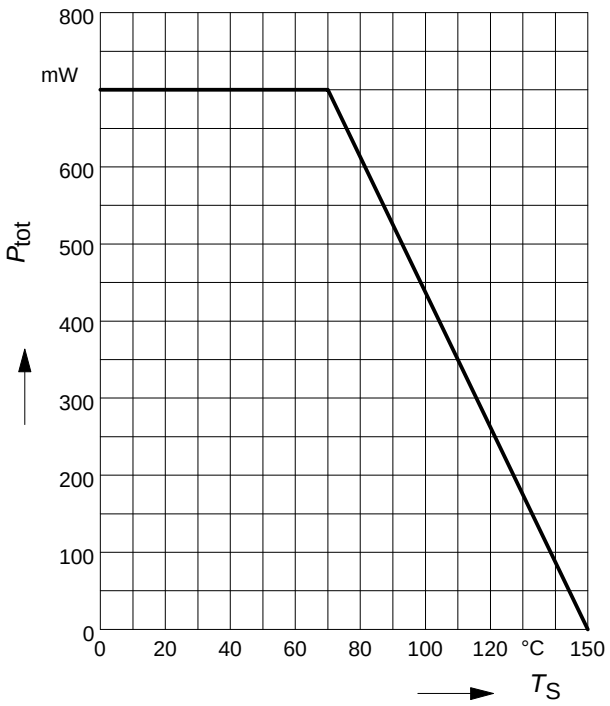

Permissible Pulse Load $R_{thJS} = f(t_p)$

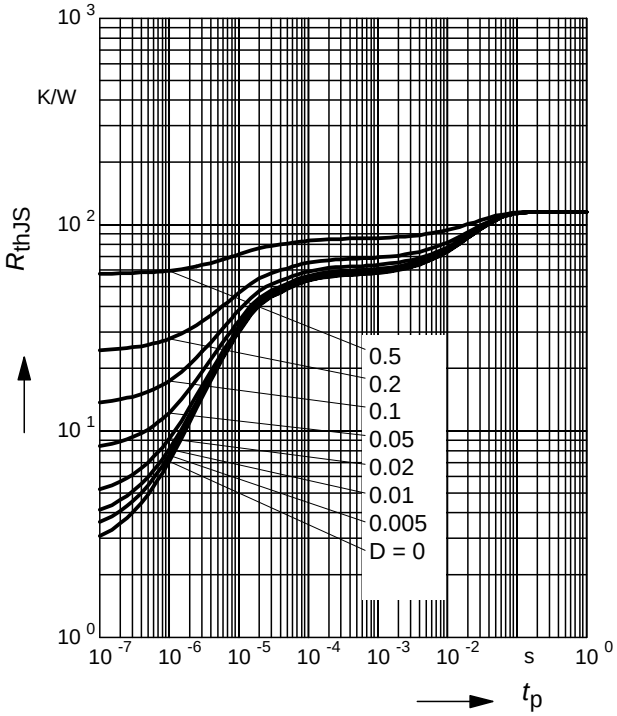

Permissible Pulse Load

$P_{totmax}/P_{totDC} = f(t_p)$

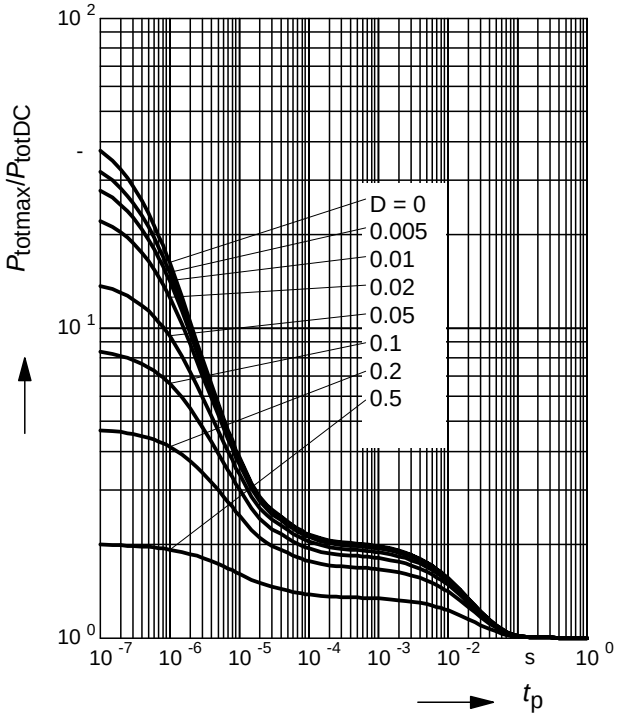

Package Outline



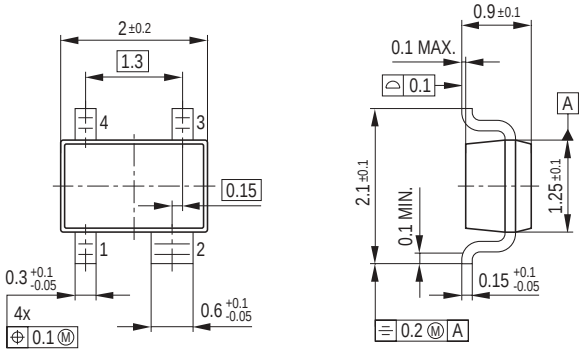

Foot Print

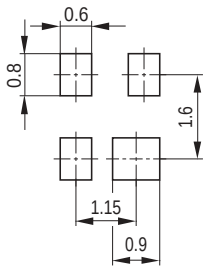

Marking Layout (Example)

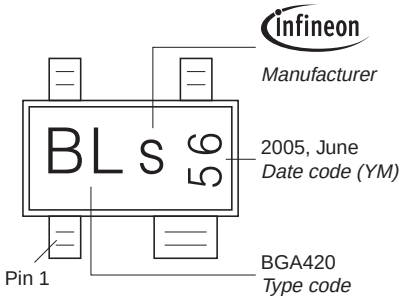

Standard Packing

Reel ø180 mm = 3.000 Pieces/Reel
Reel ø330 mm = 10.000 Pieces/Reel

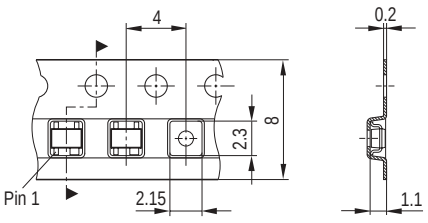

2007-04-20

Edition 2006-02-01
Published by
Infineon Technologies AG
81726 München, Germany
© Infineon Technologies AG 2007.
All Rights Reserved.

Attention please!

The information given in this dokument shall in no event be regarded as a guarantee of conditions or characteristics (“Beschaffenheitsgarantie”). With respect to any examples or hints given herein, any typical values stated herein and/or any information regarding the application of the device, Infineon Technologies hereby disclaims any and all warranties and liabilities of any kind, including without limitation warranties of non-infringement of intellectual property rights of any third party.

Information

For further information on technology, delivery terms and conditions and prices please contact your nearest Infineon Technologies Office (**www.infineon.com**).

Warnings

Due to technical requirements components may contain dangerous substances. For information on the types in question please contact your nearest Infineon Technologies Office.
Infineon Technologies Components may only be used in life-support devices or systems with the express written approval of Infineon Technologies, if a failure of such components can reasonably be expected to cause the failure of that life-support device or system, or to affect the safety or effectiveness of that device or system.
Life support devices or systems are intended to be implanted in the human body, or to support and/or maintain and sustain and/or protect human life. If they fail, it is reasonable to assume that the health of the user or other persons may be endangered.