Transys Electronics LIMITED

SOT-23 Formed SMD Package

BF820
BF822

SILICON EPITAXIAL TRANSISTORS

N–P–N transistors

Marking
BF820 = 1V
BF822 = 1X

PACKAGE OUTLINE DETAILS
ALL DIMENSIONS IN mm

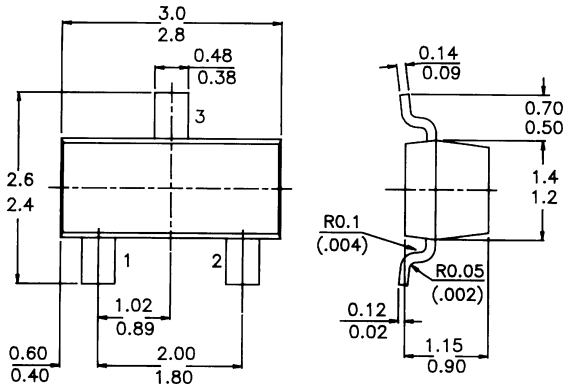

Pin configuration

1 = BASE
2 = EMITTER
3 = COLLECTOR

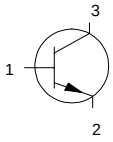

ABSOLUTE MAXIMUM RATINGS

			BF820	BF822	
Collector–base voltage (open emitter)	V_{CB0}	*max.*	*300*	*250*	*V*
Collector–emitter voltage (open base)	V_{CE0}	*max.*	*–*	*250*	*V*
Collector–emitter voltage (R_{BE} = 2,7 kW)	V_{CER}	*max.*	*300*	*—*	*V*
Collector current (peak value)	I_{CM}	*max.*	*100*		*mA*
Total power dissipation up to T_{amb} = 25 °C	P_{tot}	*max.*	*250*		mW
Junction temperature	T_j	*max.*	*150*		*° C*
D.C. current gain					
I_C = 25 mA; V_{CE} = 20 V	h_{FE}	>	*50*		
Feedback capacitance at f = 1 MHz					
I_C = 0; V_{CE} = 30 V	C_{re}	<	*1,6*		*pF*
Transition frequency at f = 35 MHz					
I_C = 10mA; V_{CE} = 10 V	f_T	>	*60*		MHz

RATINGS *(at T_A = 25°C unless otherwise specified)*
Limiting values

			BF820	***BF822***	
Collector–base voltage (open emitter)	V_{CB0}	*max.*	*300*	*250*	*V*
Collector–emitter voltage (open base)	V_{CE0}	*max.*	*–*	*250*	*V*
Collector–emitter voltage (R_{BE} = 2,7 kW)	V_{CER}	*max.*	*300*	*—*	*V*
Emitter–base voltage (open collector)	V_{EB0}	*max.*	*5*		*V*
Collector current (d.c.)	I_C	*max.*	*50*		*mA*
Collector current (peak value)	I_{CM}	*max.*	*100*		*mA*
Total power dissipation					
up to T_{amb} = 25 °C	P_{tot}	*max.*	*250*		mW
Storage temperature	T_{stg}		*–55 to +150*		*° C*
Junction temperature	T_j	*max.*	*150*		*° C*

THERMAL RESISTANCE

From junction to ambient	$R_{th\ j-a}$	*500*	K/W

CHARACTERISTICS

			BF820	***BF822***	
T_j = 25 °C unless otherwise specified					
Collector cut–off current					
I_E = 0; V_{CB} = 200 V	I_{CB0}	<	*10*	*10*	*nA*
Collector–emitter voltage					
R_{BE} = 2,7 kW; V_{CE} = 250 V	I_{CER}	<	*50*	*50*	*nA*
R_{BE} = 2,7kW; V_{CE} = 200V; T_j = 150°C	I_{CER}	<	*10*	*10*	mA
Saturation voltage					
I_C = 30 mA; I_B = 5 mA	V_{CEsat}	<	*0,6*		*V*
D.C. current gain					
I_C = 25 mA; V_{CE} = 20 V	h_{FE}	>	*50*		
Transition frequency at f = 35 MHz					
I_C = 10 mA; V_{CE} = 10 V	f_T	>	*60*		MHz
Feedback capacitance at f = 1 MHz					
I_C = 0; V_{CE} = 30 V	C_{re}	<	*1,6*		*pF*