BF601M

Order Code: BF601M

Gas Discharge Tube

Version: A0 2013-10-30

Features

- Small Size Design 4.2×5.0×5.0mm Current
- Handling Capability 5,000A @ 8/20 μ s
- Low Capacitance and Insertion Loss
- Fast Response and Long Service Life
- Moisture sensitivity level: Level 1

Exterior



SMD

Application information

- AC Power

Package (Top View)



Agency Approvals

Icon	Description
RoHS	Compliance with 2011/65/EU
HF	Compliance with IEC61249-2-21:2003
Pb	Mean lead free
.RU	UL Certificated E232249

Schematic Symbol

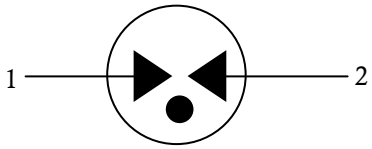

Electrical Parameter

DC Breakdown Voltage 1)2)	100V/s	480-720	V
Impulse Spark-over Voltage	At 1kV/μs	for 99 % of measured values ≤ 1200	V
	At 1kV/μs	Typical values of distribution ≤ 1100	V
Impulse Discharge Current 3)	8/20μs	5,000	A
Arc Voltage	At 1A	~8	V
Insulation Resistance	DC=100V	≥1	GΩ
Capacitance at 1MHz	V_{DC}=0.5V	≤1.0	pF
Weight		~0.5	g
Operating And Storage Temperature		-40-90	℃
Marking		Without	

1) At delivery AQL 0.65 level II GB/T 2828.1-2003
2) In ionized mode
3) Terms and waveforms in accordance with ITU-T Rec. K. 12; IEC 61643-21

Specifications are subject to change without notice.
Customers should verify actual device performance in their specific applications

Part Numbering System

BF 601 M

(1) (2) (3)

(1)Bencent Gas Discharge Tube

(2) Series: DC Breakdown Voltage,

e.g.: $601=60\times10^{1}=600V$

(3) Tolerance of DC Breakdown Voltage, M=+-20%, N=+-30%,the Specific tolerance is decided by the table of "Electrical Parameter"

Product Characteristics

Lead Material	Copper
Body Material	Ceramics
Terminal Finish	100% Matte-Tin Plated

Environmental Reliability Characteristics

Testing items	Technical standards
High Temperature Storage Test	Temperature: 85℃ Time:2H
Low Temperature Storage Test	Temperature: -40℃ Time:2H
Vibration	Frequency：10-500Hz Amplitude：0.15mm Time：45min
Resistance of soldering heat	Temperature: 260±5℃ Time of dip soldering：10s，1time

Note: Up-screen program can be specified by customer's request via contacting Bencent service

Solderability test

Solderability	Solder Pot Temperature:	245℃±5℃
	Solder Dwell Time:	4-6 seconds

Product Dimensions

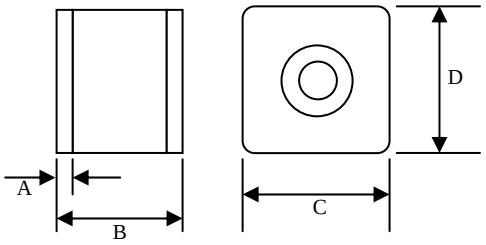

REF	mm	inch
A	0.5±0.1	0.020±0.004
B	4.2±0.3	0.165±0.012
C	5.0±0.2	0.197±0.008
D	5.0±0.2	0.197±0.008

Recommended Soldering Pad

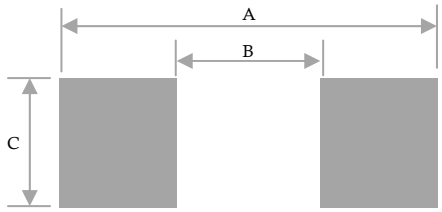

REF	mm	inch
A	4.95	0.195
B	3.0	0.118
C	5.5	0.217

Specifications are subject to change without notice.
Customers should verify actual device performance in their specific applications

Reflow Profile

Reflow Condition		Pb-Free assembly
Pre Heat	Temperature Min	150°C
	Temperature Max	200°C
	Time （min to max）	60 – 180 secs
Average ramp up rate（Liquids）Tamp （T_L） to peal		3°C/second max
T_S(max) to T_L - Ramp-up Rate		3°C/second max
Reflow	- Temperature (T_L) (Liquids)	217°C
	- Temperature (T_L)	60 – 150 seconds
Peak Temperature (T_P)		260+0/-5 °C
Time within 5°C of actual peak Temperature (tp)		~10 seconds
Ramp-down Rate		6°C/second max
Time 25°C to peak Temperature (T_P)		8 minutes Max.
Do not exceed		260°C

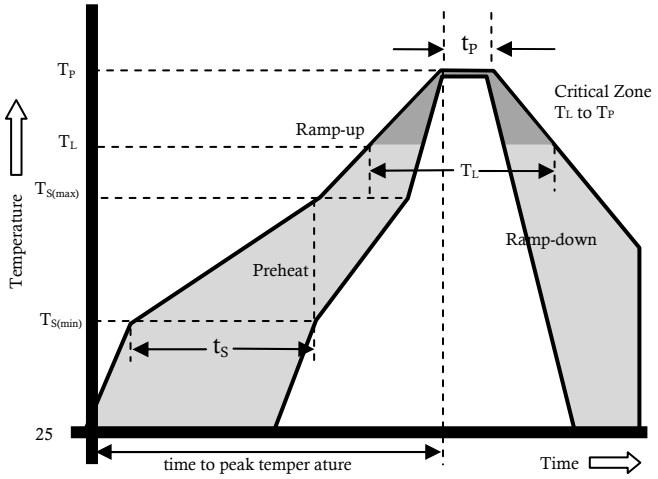

Package Reel Information

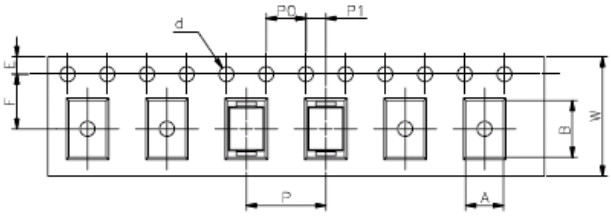

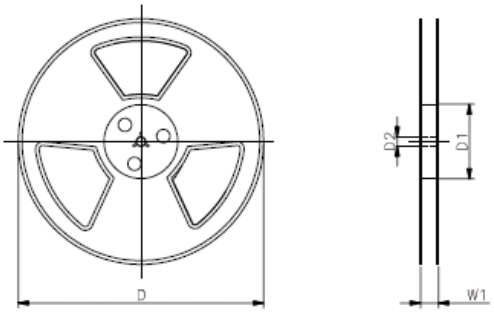

REF	mm	inch
A	5.3±0.1	0.209±0.004
B	4.5±0.2	0.177±0.008
d	Φ1.5±0.1	Φ0.059±0.004
P0	4.0±0.1	0.157±0.004
P1	2.0±0.1	0.079±0.004
P	12.0±0.1	0.472±0.004
E	1.75±0.1	0.069±0.004
F	7.5±0.1	0.295±0.004
W	16.0±0.3	0.630±0.012
D	Φ330.0	Φ13.0
D1	Φ50Min	Φ1.97Min
D2	Φ13±0.5	0.512±0.020
W1	16.8±2.0	0.661±0.079

Outline	Reel (PCS)	Per Carton (PCS)	Reel Diameter (mm)	Carton Size(mm)		
				L	W	H
TAPING	1,000	16,000	330	360	360	380

Specifications are subject to change without notice.
Customers should verify actual device performance in their specific applications