Online data sheet

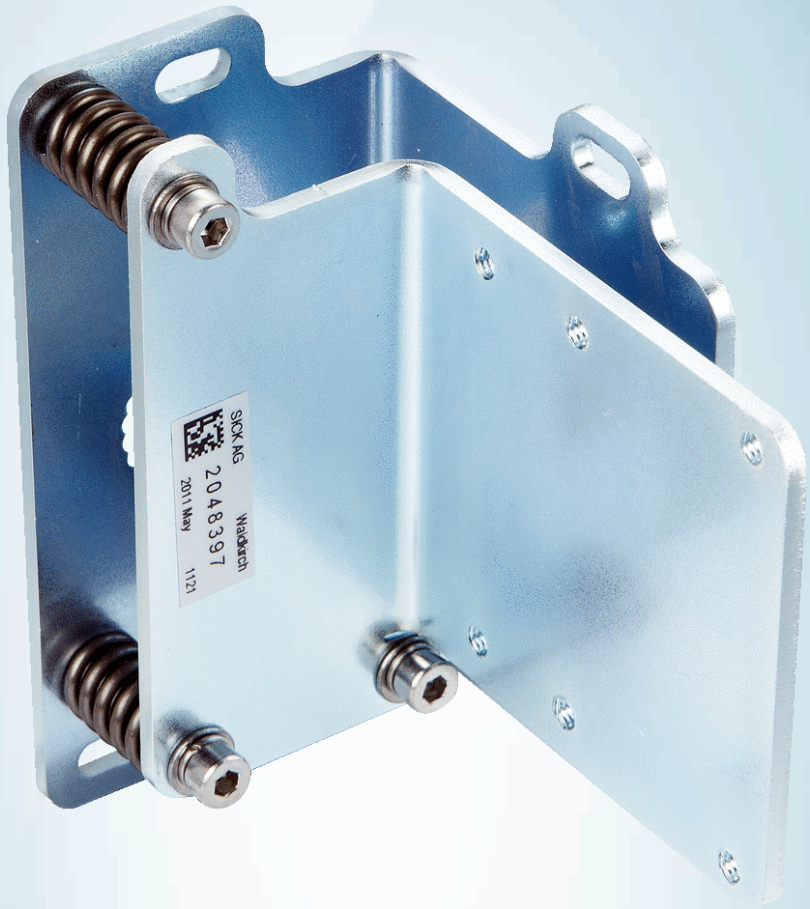

BEF-AH-DX50

SICK
Sensor Intelligence.

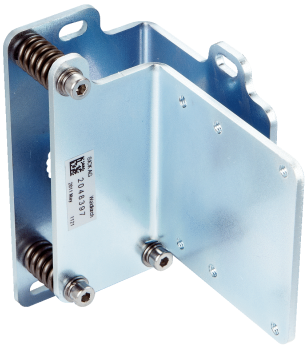

Illustration may differ

Ordering information

Type	Part no.
BEF-AH-DX50	2048397

Other models and accessories ➜ www.sick.com/

Detailed technical data

Technical specifications

Accessory group	Terminal and alignment brackets
Accessory family	Alignment brackets
Material	Steel, zinc coated
Items supplied	Mounting hardware for the sensor included
Description	Alignment unit

Classifications

ECl@ss 5.0	27279202
ECl@ss 5.1.4	27279202
ECl@ss 6.0	27279202
ECl@ss 6.2	27279202
ECl@ss 7.0	27279202
ECl@ss 8.0	27279202
ECl@ss 8.1	27279202
ECl@ss 9.0	27273701
ETIM 5.0	EC002024
ETIM 6.0	EC002024
UNSPSC 16.0901	32131023

Dimensional drawing (Dimensions in mm (inch))

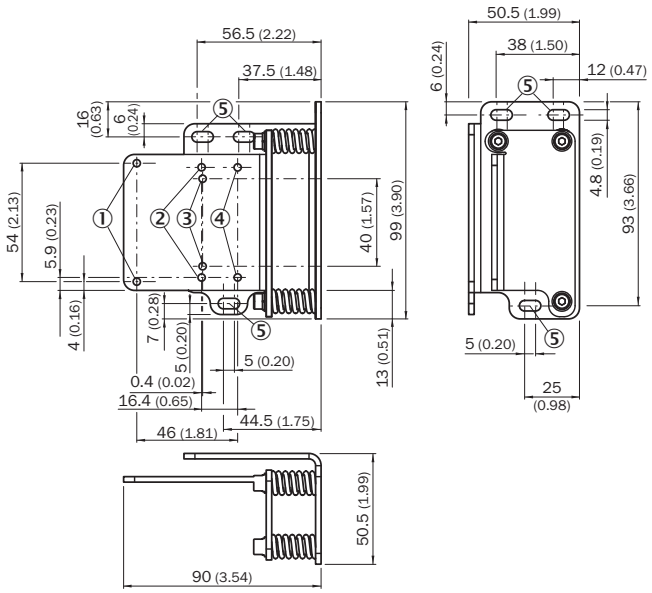

① Fixing hole for distance sensors Dx35, Dx50 and Dx50-2
② Mounting hole for distance sensors DT20 Hi
③ Fixing hole for Dx35 distance sensors
④ Fixing hole for distance sensors DT20 Hi, Dx50 and Dx50-2
⑤ Bracket fixing hole

SICK AT A GLANCE

SICK is one of the leading manufacturers of intelligent sensors and sensor solutions for industrial applications. A unique range of products and services creates the perfect basis for controlling processes securely and efficiently, protecting individuals from accidents and preventing damage to the environment.

We have extensive experience in a wide range of industries and understand their processes and requirements. With intelligent sensors, we can deliver exactly what our customers need. In application centers in Europe, Asia and North America, system solutions are tested and optimized in accordance with customer specifications. All this makes us a reliable supplier and development partner.

Comprehensive services complete our offering: SICK LifeTime Services provide support throughout the machine life cycle and ensure safety and productivity.

For us, that is “Sensor Intelligence.”

WORLDWIDE PRESENCE:

Contacts and other locations –www.sick.com