SILICON DARLINGTON POWER TRANSISTORS

P-N-P epitaxial base transistors in monolithic Darlington circuit for audio output stages and general purpose amplifier and switching applications. TO-220 plastic envelope. N-P-N complements are BDT65, BDT65A, BDT65B and BDT65C.

QUICK REFERENCE DATA

			BDT64	64A	64B	64C	
Collector-base voltage (open emitter)	$-V_{CBO}$	max.	60	80	100	120	V
Collector-emitter voltage (open base)	$-V_{CEO}$	max.	60	80	100	120	V
Emitter-base voltage (open collector)	$-V_{EBO}$	max.	5	5	5	5	V
Collector current (d.c.)	$-I_C$	max.		12			A
Total power dissipation up to T_{mb} = 25 °C	P_{tot}	max.		125			W
Junction temperature	T_j	max.		150			°C
D.C. current gain $-I_C$ = 5 A; $-V_{CE}$ = 4 V	h_{FE}	>		1000			

MECHANICAL DATA

Dimensions in mm

Fig. 1 TO-220AB.
Collector connected to mounting base.

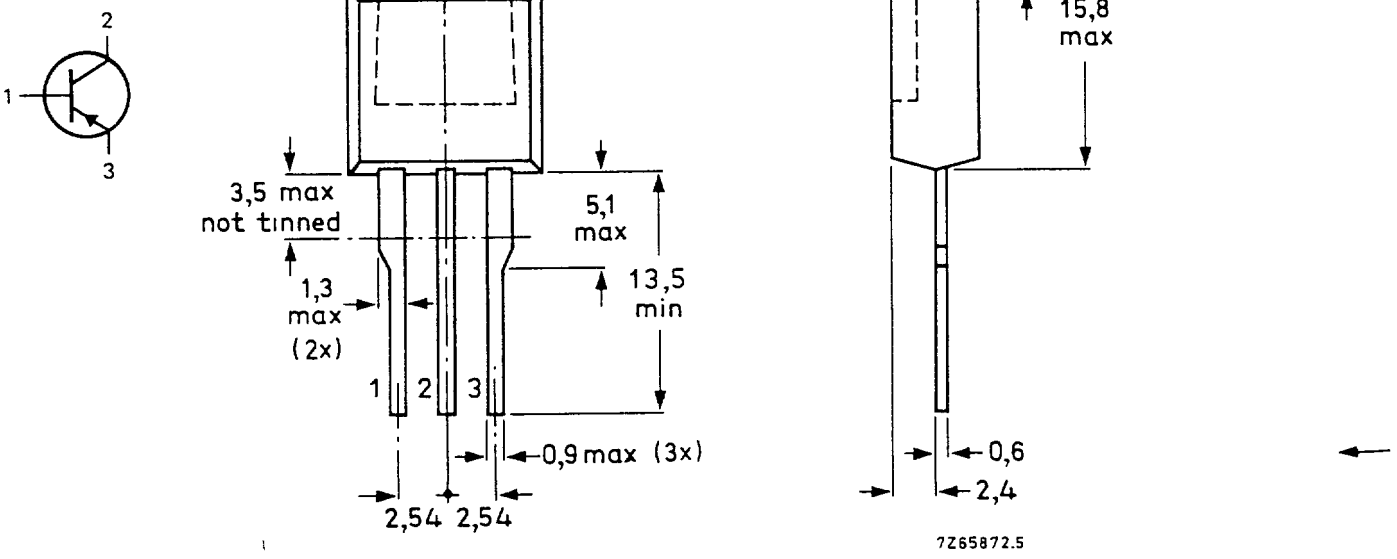

See also chapters Mounting instructions and Accessories.

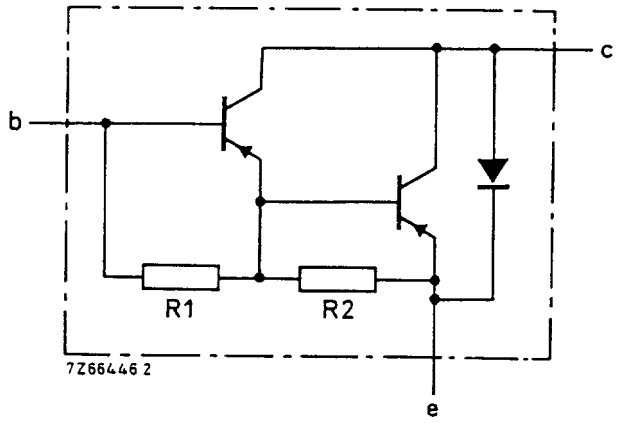

Fig. 2 Circuit diagram. R1 typ. 3 kΩ; R2 typ. 45 Ω.

RATINGS

Limiting values in accordance with the Absolute Maximum System (IEC 134)

			BDT64	64A	64B	64C	
Collector-base voltage (open emitter)	$-V_{CBO}$	max.	60	80	100	120	V
Collector-emitter voltage (open base)	$-V_{CEO}$	max.	60	80	100	120	V
Emitter-base voltage (open collector)	$-V_{EBO}$	max.	5	5	5	5	V
Collector current (d.c.)	$-I_C$	max.	12				A
Collector current (peak value)	$-I_{CM}$	max.	20				A
Base current (d.c.)	$-I_B$	max.	500				mA
Total power dissipation up to T_{mb} = 25 °C	P_{tot}	max.	125				W
Storage temperature	T_{stg}		−65 to + 150				°C
Junction temperature	T_j	max.	150				°C

THERMAL RESISTANCE

From junction to mounting base	$R_{th\ j\text{-}mb}$	=	1	K/W

CHARACTERISTICS

T_j = 25 °C unless otherwise specified.

Collector cut-off current				
$-V_{CB} = -V_{CBOmax}$, $I_E = 0$	$-I_{CBO}$	<	0,4	mA
$I_E = 0$; $-V_{CB} = -½\ V_{CBOmax}$, T_j = 150 °C	$-I_{CBO}$	<	2	mA
$I_B = 0$; $-V_{CE} = -½\ V_{CEOmax}$	$-I_{CEO}$	<	0,2	mA ←
Emitter cut-off current				
$I_C = 0$; $-V_{EB}$ = 5 V	$-I_{EBO}$	<	5	mA
D.C. current gain*				
$-I_C$ = 1 A; $-V_{CE}$ = 4 V	h_{FE}	typ.	1500	
$-I_C$ = 5 A; $-V_{CE}$ = 4 V	h_{FE}	>	1000	
$-I_C$ = 12 A; $-V_{CE}$ = 4 V	h_{FE}	typ.	750	
Base-emitter voltage				
$-I_C$ = 5 A; $-V_{CE}$ = 4 V	$-V_{BE}$	<	2,5	V
Collector-emitter saturation voltage*				
$-I_C$ = 5 A; $-I_B$ = 20 mA	$-V_{CEsat}$	<	2	V
$-I_C$ = 10 A; $-I_B$ = 100 mA	$-V_{CEsat}$	<	3	V
Diode, forward voltage				
I_F = 5 A	V_F	<	2	V
I_F = 12 A	V_F	typ.	2	V
Collector capacitance at f = 1 MHz				
$-V_{CB}$ = 10 V; $I_E = I_e = 0$	C_c	typ.	200	pF
Second breakdown collector current				
non-repetitive; without heatsink				
$-V_{CE}$ = 60 V; t_p = 0,1 s	$-I_{SB}$	>	2	A
Switching times (see Figs 3 and 4)				
$-I_{Con} = 5$ A; $-I_{Bon} = I_{Boff} = 20$ mA				
$-V_{CC}$ = 30 V				
turn-on time	t_{on}	typ.	0,5	μs
		<	2	μs
turn-off time	t_{off}	typ.	2,5	μs
		<	5	μs
Small-signal current gain				
$-I_C$ = 5 A; $-V_{CE}$ = 3 V; f = 1 MHz	h_{fe}	>	10	

* Measured under pulse conditions: $t_p < 300\ \mu s$; $\delta < 2\%$.

CHARACTERISTICS (continued)

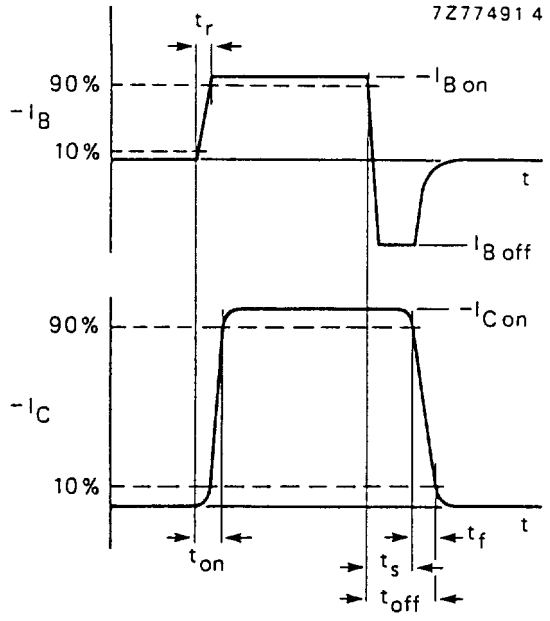

Fig. 3 Switching times waveforms.

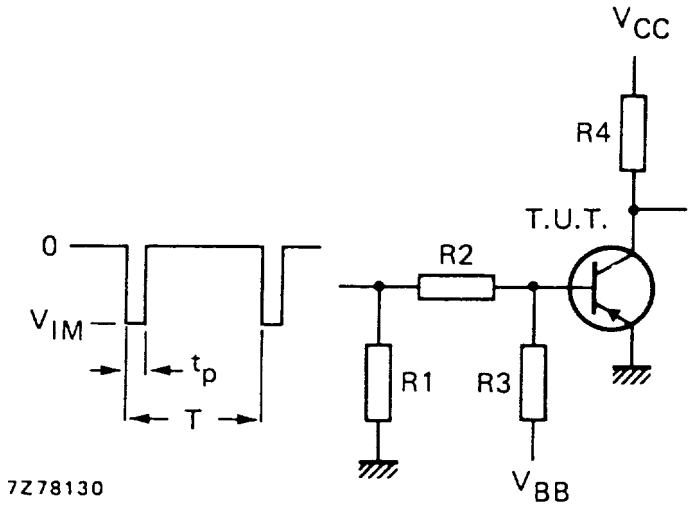

$-V_{IM}$	=	15 V
$-V_{CC}$	=	30 V
V_{BB}	=	4 V
R1	=	56 Ω
R2	=	410 Ω
R3	=	560 Ω
R4	=	6 Ω
$t_r = t_f$	=	15 ns
t_p	=	10 μs
T	=	500 μs

Fig. 4 Switching times test circuit.

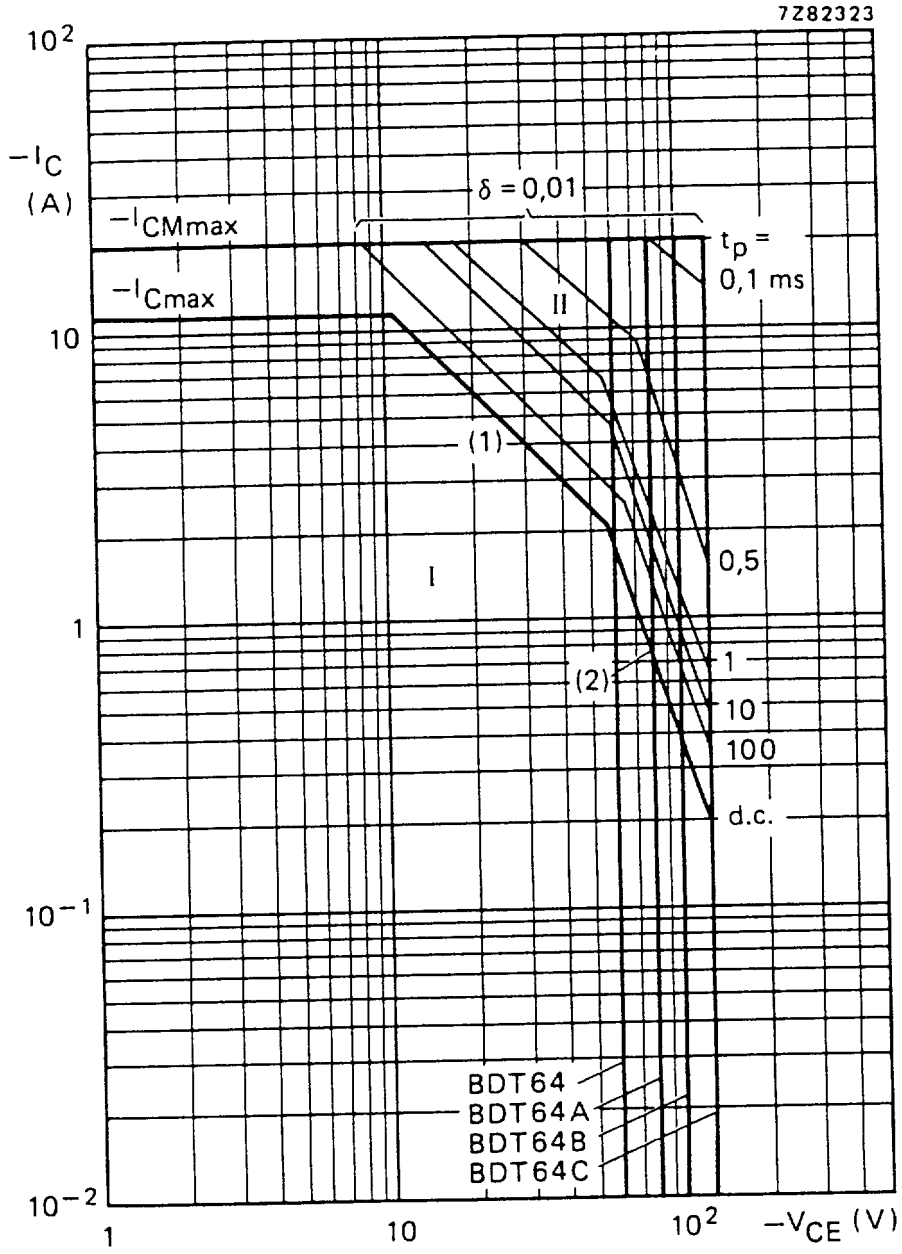

Fig. 5 Safe Operating ARea; T_{mb} = 25 °C.

I Region of permissible d.c. operation.
II Permissible extension for repetitive pulse operation.
(1) $P_{tot\,max}$ and $P_{peak\,max}$ lines.
(2) Second-breakdown limits.

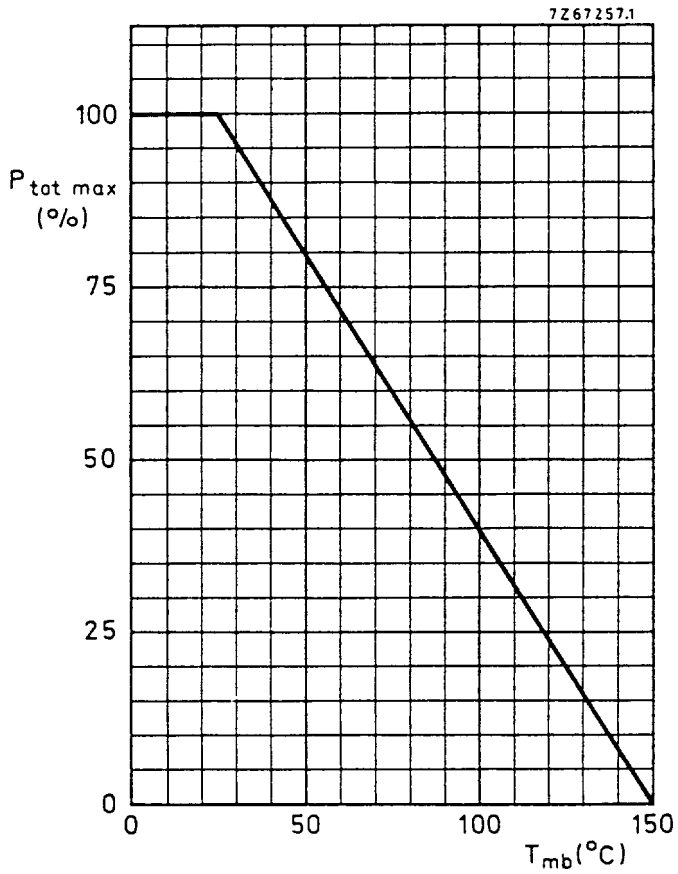

Fig. 6 Power derating curve.

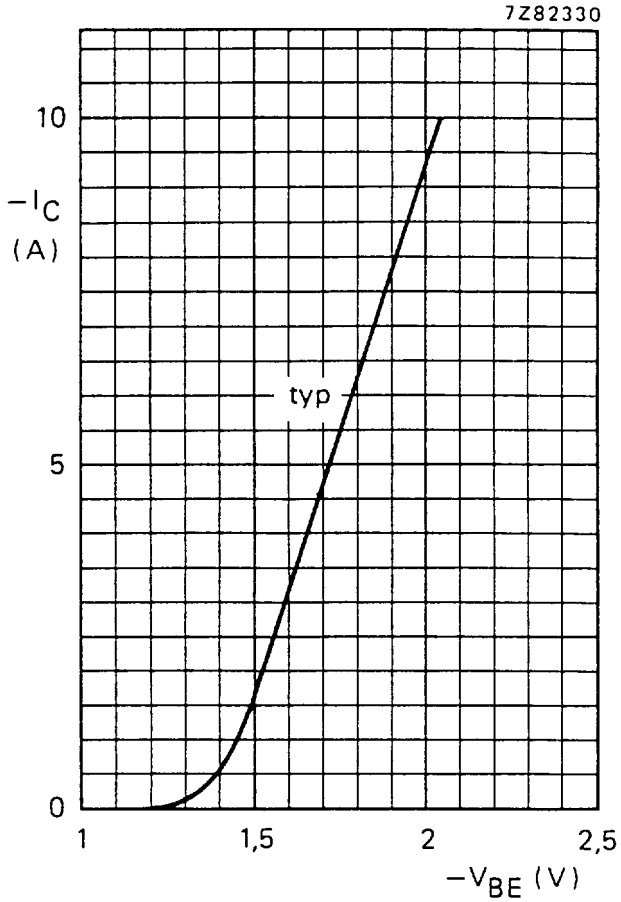

Fig. 7 $-V_{CE}$ = 3 V; T_{amb} = 25 °C.

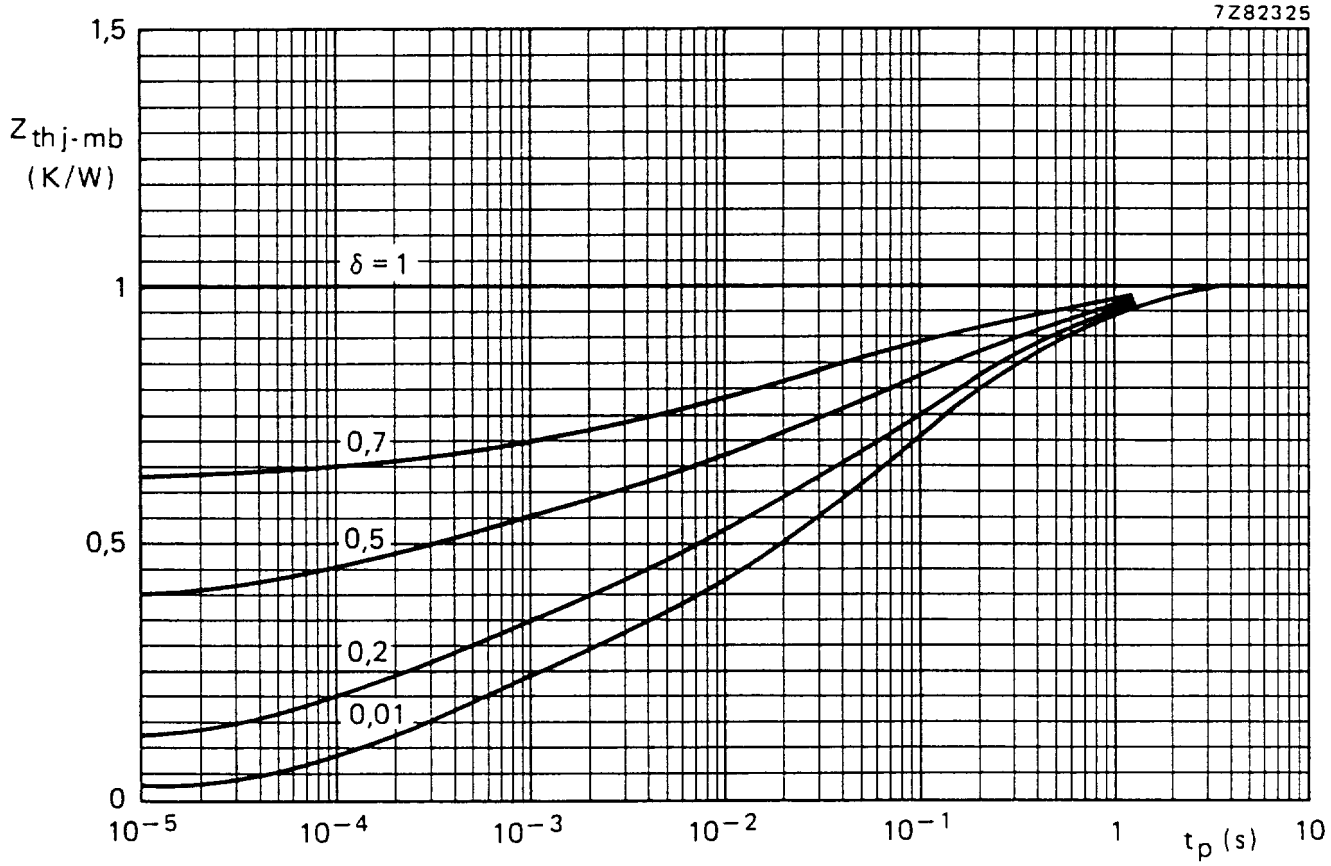

Fig. 8 Pulse power rating chart.

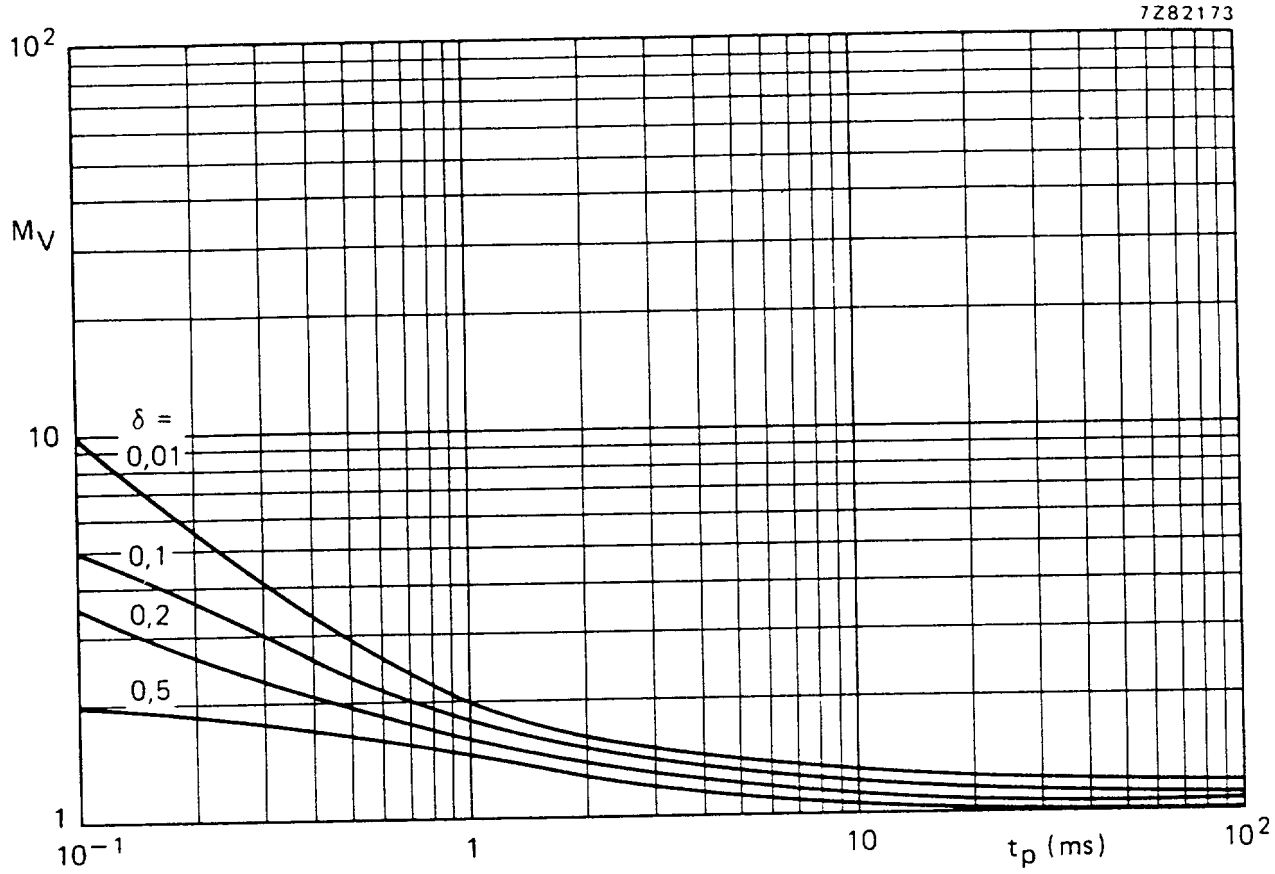

Fig. 9 S.B. voltage multiplying factor at the I_{Cmax} level.

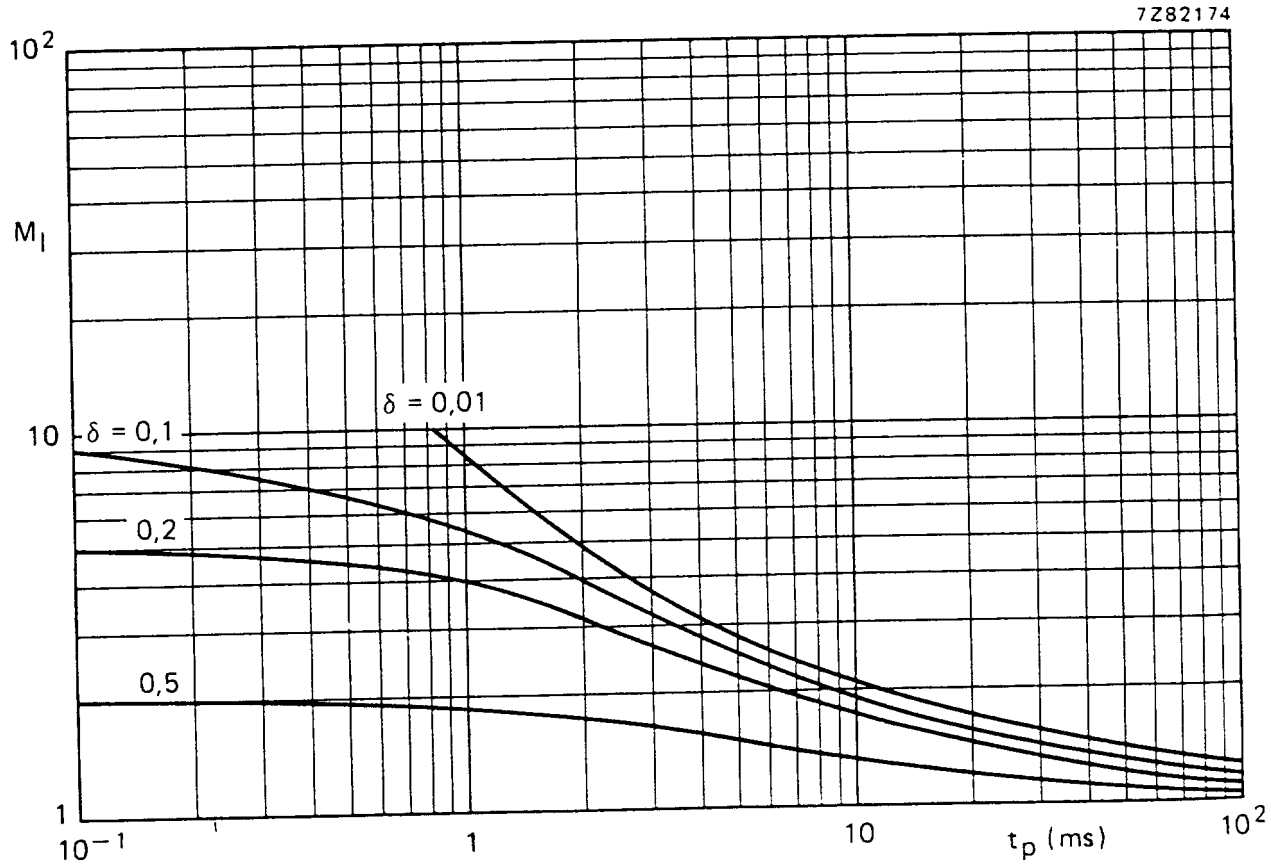

Fig. 10 S.B. current multiplying factor at the V_{CEOmax} level.

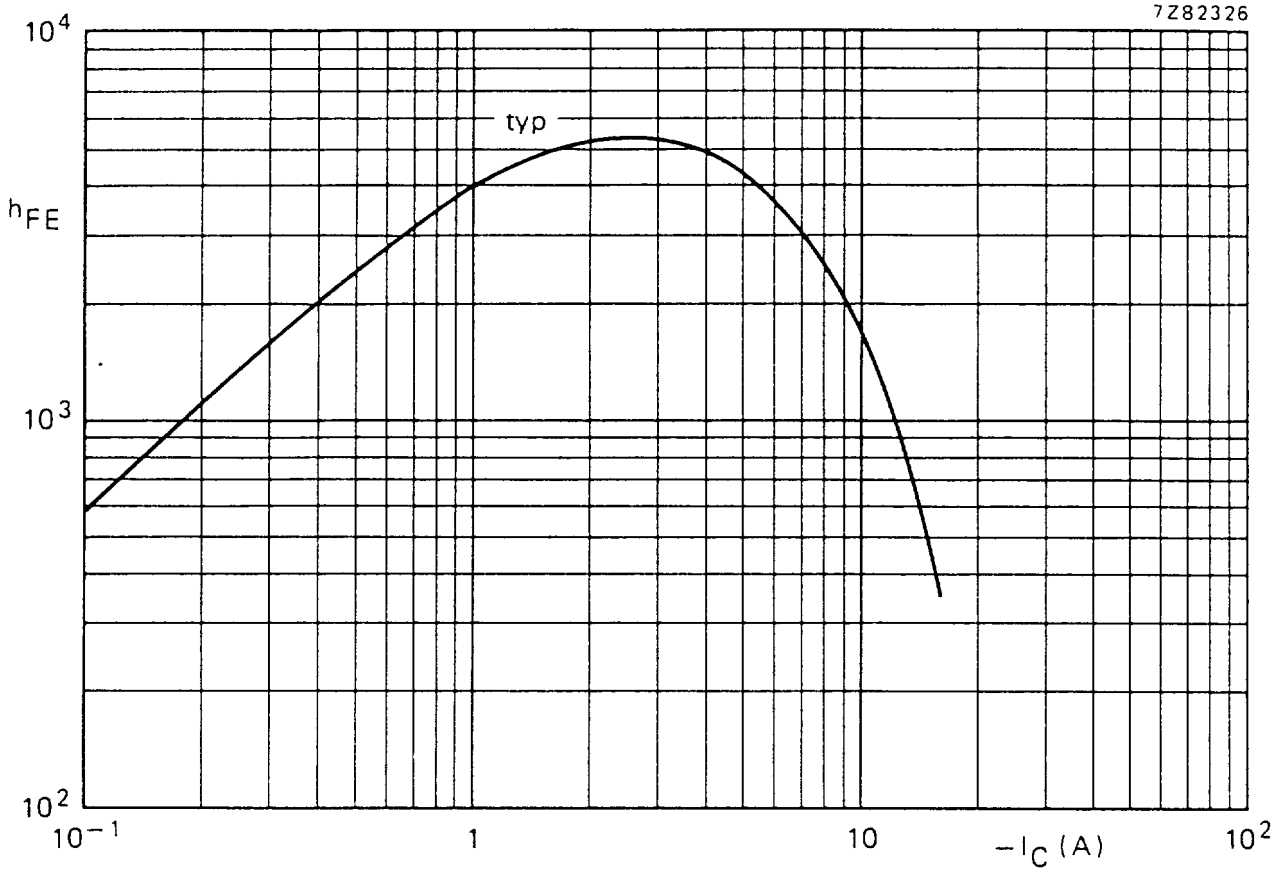

Fig. 11 D.C. current gain. $-V_{CE} = 3$ V; $T_j = 25$ °C.

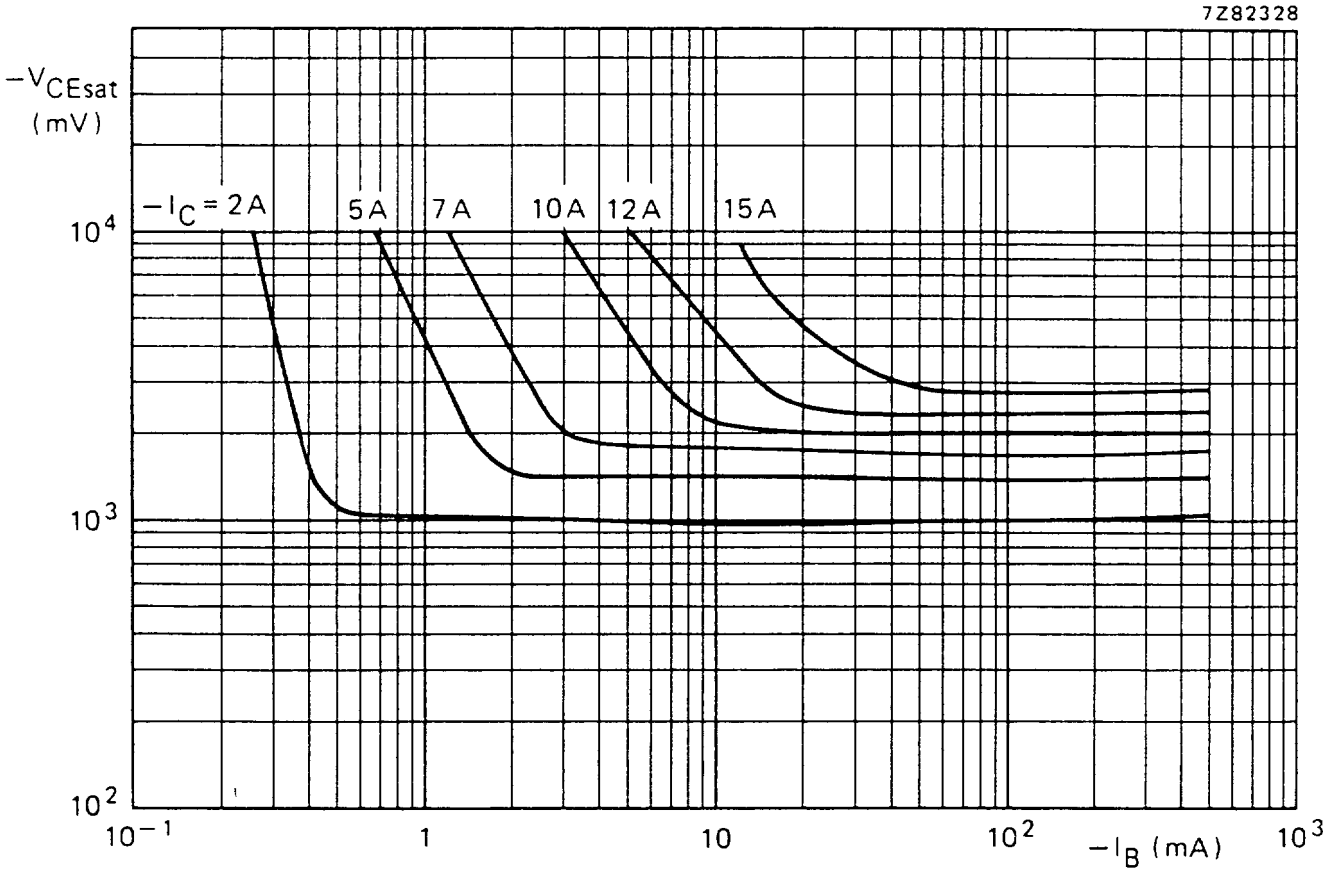

Fig. 12 Typical collector-emitter saturation voltages.

SILICON DARLINGTON POWER TRANSISTORS

PNP Silicon Darlington power transistors in a SOT-186 envelope with an electrically insulated mounting base. The devices are designed for audio output stages and general amplifier and switching applications. NPN complements are BDT65F, BDT65AF, BDT65BF and BDT65CF.

QUICK REFERENCE DATA

			BDT64F	64AF	64BF	64CF	
Collector-base voltage (open emitter)	$-V_{CBO}$	max.	60	80	100	120	V
Collector-emitter voltage (open base)	$-V_{CEO}$	max.	60	80	100	120	V
Collector current DC	$-I_C$	max.		12			A
Total power dissipation up to $T_h = 25$ °C	P_{tot}	max.		39			W
Junction temperature	T_j	max.		150			°C
DC current gain $-I_C = 5$ A; $-V_{CE} = 4$ V	h_{FE}	min.		1000			

MECHANICAL DATA

Dimensions in mm

Fig. 1 SOT-186.

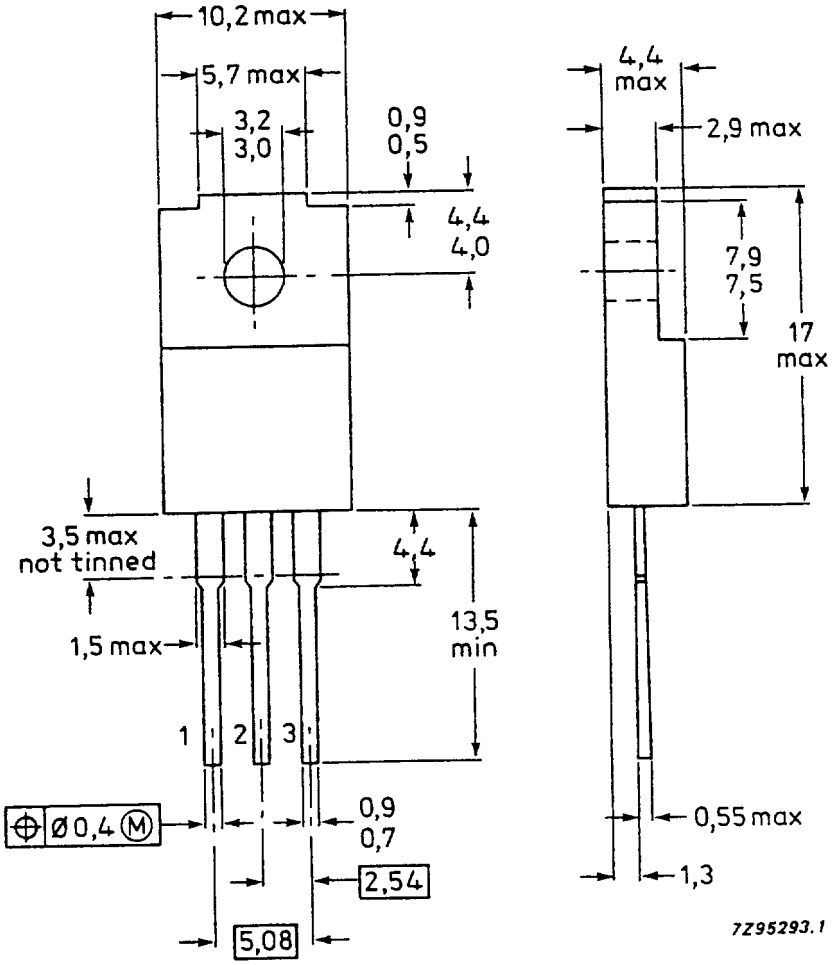

Pinning.

1 = Base
2 = Collector
3 = Emitter

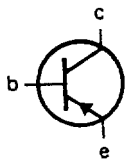

RATINGS

Limiting values in accordance with the Absolute Maximum System (IEC 134)

			BDT64F	64AF	64BF	64CF	
Collector-base voltage (open emitter)	$-V_{CBO}$	max.	60	80	100	120	V
Collector-emitter voltage (open base)	$-V_{CEO}$	max.	60	80	100	120	V
Emitter-base voltage (open collector)	$-V_{EBO}$	max.		5.0			V
Collector current							
DC	$-I_C$	max.		12			A
peak value	$-I_{CM}$	max.		20			A
Base current (DC)	$-I_B$	max.		500			mA
Total power dissipation							
up to T_h = 25 °C (1)	P_{tot}	max.		22			W
up to T_h = 25 °C (2)		max.		39			W
Storage temperature	T_{stg}			−65 to 150			°C
Junction temperature	T_j	max.		150			°C

THERMAL RESISTANCE

From junction to internal heatsink	$R_{th\ j\text{-}mb}$	=	0.9	K/W
From junction to external heatsink (1)	$R_{th\ j\text{-}h}$	=	5.7	K/W
From junction to external heatsink (2)	$R_{th\ j\text{-}h}$	=	3.2	K/W

INSULATION

Voltage allowed between all terminals and external heatsink, peak value	V_{insul}	max.	1000	V
Insulation capacitance from collector to external heatsink	C_{th}	typ.	12	pF

(1) Mounted without heatsink compound and 30 ± 5 newton pressure on centre of envelope.

(2) Mounted with heatsink compound and 30 ± 5 newton pressure on centre of envelope.

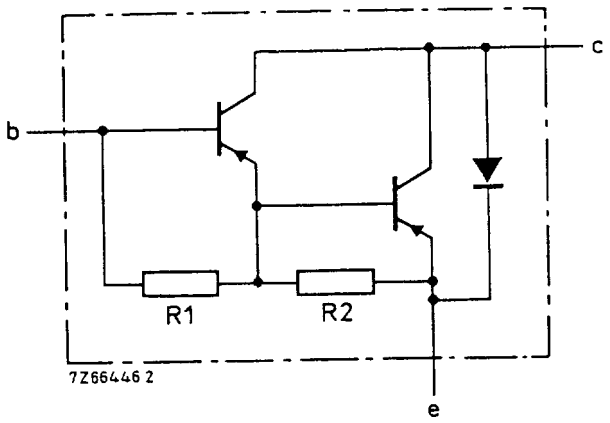

R1 typ. 3 kΩ
R2 typ. 45 Ω

Fig. 2 Circuit diagram.

CHARACTERISTICS

T_j = 25 °C unless otherwise specified

Collector cut-off current				
I_E = 0; $-V_{CB} = -V_{CBOmax}$	$-I_{CBO}$	max.	0.4	mA
I_E = 0, T_j = 150 °C; $-V_{CB} = -1/2\ V_{CBOmax}$	$-I_{CBO}$	max.	2.0	mA
I_B = 0; $-V_{CE} = -1/2\ V_{CEOmax}$	$-I_{CEO}$	max.	1.0	mA
Emitter cut-off current				
I_C = 0; $-V_{EB}$ = 5 V	$-I_{EBO}$	max.	5.0	mA
DC current gain (3)				
$-I_C$ = 1 A; $-V_{CE}$ = 4 V	h_{FE}	typ.	4000	
$-I_C$ = 5 A; $-V_{CE}$ = 4 V	h_{FE}	min.	1000	
$-I_C$ = 12 A; $-V_{CE}$ = 4 V	h_{FE}	typ.	800	
Base-emitter voltage (3)				
$-I_C$ = 5 A; $-V_{CE}$ = 4 V	$-V_{BE}$	max.	2.5	V
Collector-emitter saturation voltage (3)				
$-I_C$ = 5 A; $-I_B$ = 20 mA	$-V_{CEsat}$	max.	2.0	V
$-I_C$ = 10 A; $-I_B$ = 100 mA	$-V_{CEsat}$	max.	3.0	V
Diode, forward voltage				
I_F = 5 A	V_F	max.	2.0	V
Collector capacitance at f = 1 MHz				
$-V_{CB}$ = 10 V; $I_E = I_C$ = 0	C_c	typ.	200	pF
Second-breakdown collector current non-repetitive; without heatsink				
$-V_{CE}$ = 60 V; t_p = 0.1 s	$-I_{(SB)}$	min.	0.65	A
Switching times				
$-I_{Con}$ = 5 A; $-I_{Bon} = I_{Boff}$ = 20 mA; $-V_{CC}$ = 30 V				
Turn-on time	t_{on}	typ.	0.5	μs
		max.	2.0	μs
Turn-off time	t_{off}	typ.	2.5	μs
		max.	5.0	μs
Small-signal current gain at f = 1 MHz				
$-I_C$ = 5 A; $-V_{CE}$ = 3 V	h_{fe}	min.	10	

(3) Measured under pulse conditions; $t_p < 300\ \mu s$; $\delta < 2\%$.

CHARACTERISTICS (continued)

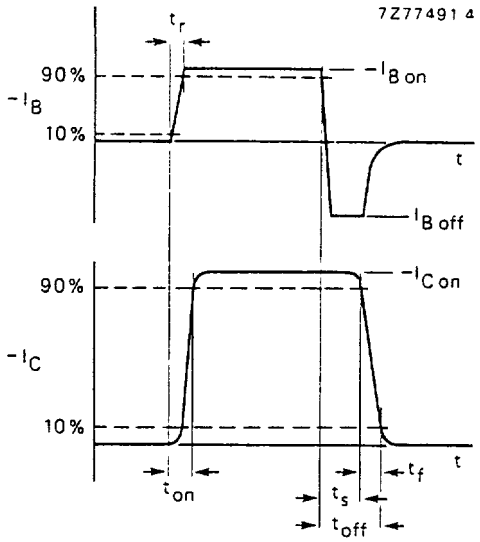

Fig. 3 Switching times waveforms.

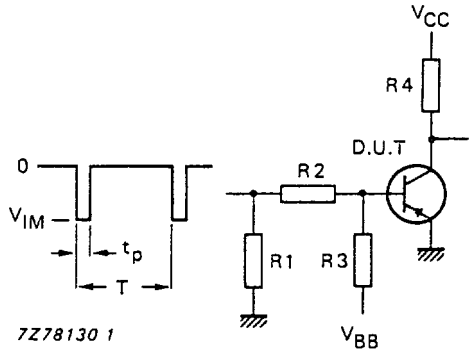

$-V_{IM}$ = 15 V
$-V_{CC}$ = 30 V
$+V_{BB}$ = 4 V
R1 = 56 Ω
R2 = 410 Ω
R3 = 560 Ω
R4 = 6 Ω
$t_r = t_f$ = 15 ns
t_p = 10 μs
T = 500 μs

Fig. 4 Switching times test circuit.

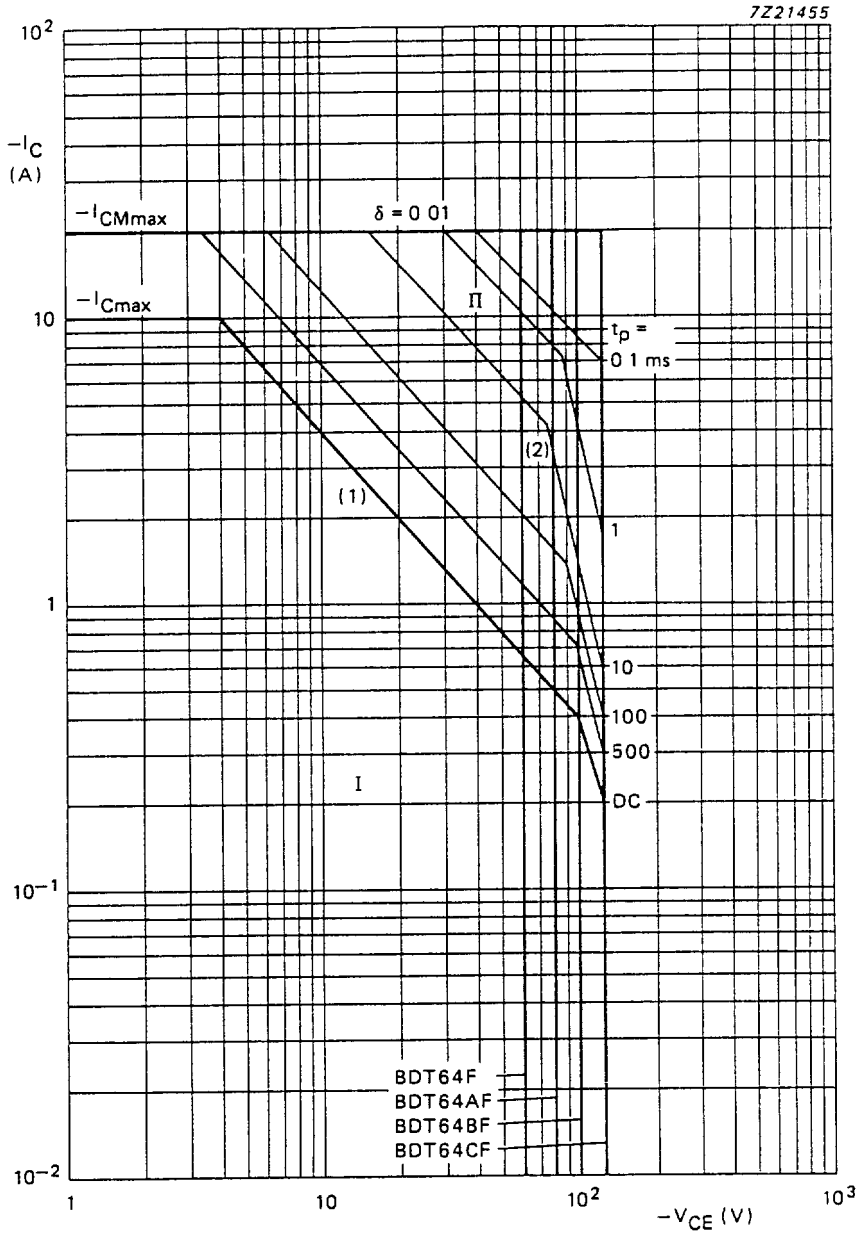

Fig. 5 Safe Operating Area; T_h = 25 °C.

(I) Region of permissible DC operation.

(II) Permissible extension for repetitive pulse operation.

(1) $P_{tot\ max}$ and $P_{peak\ max}$ lines.

(2) Second-breakdown limits.

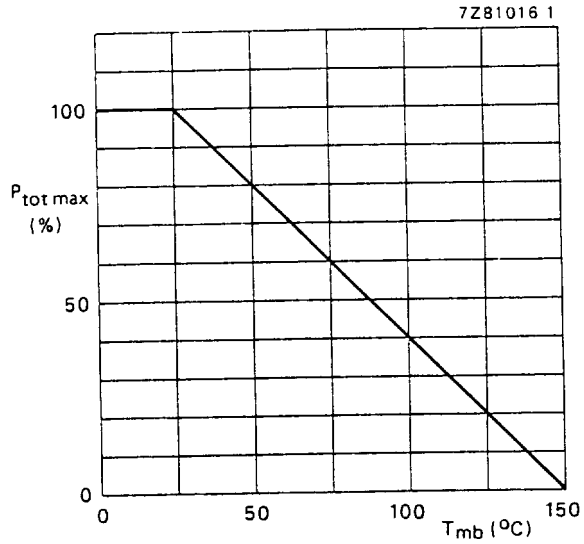

Fig. 6 Power derating curve.

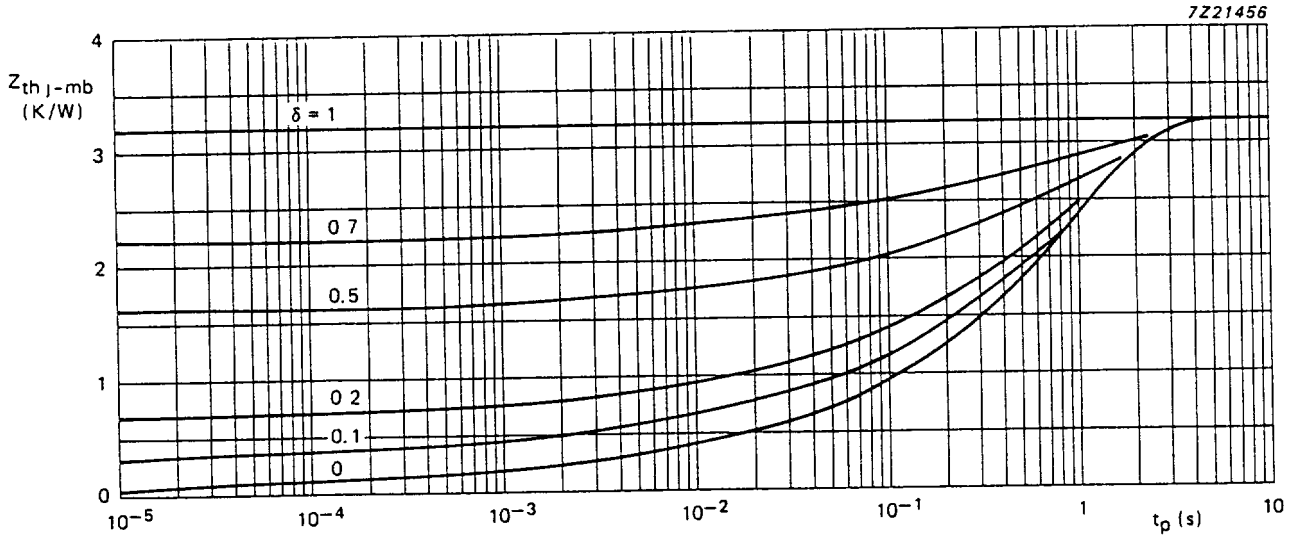

Fig. 7 Pulse power rating chart.

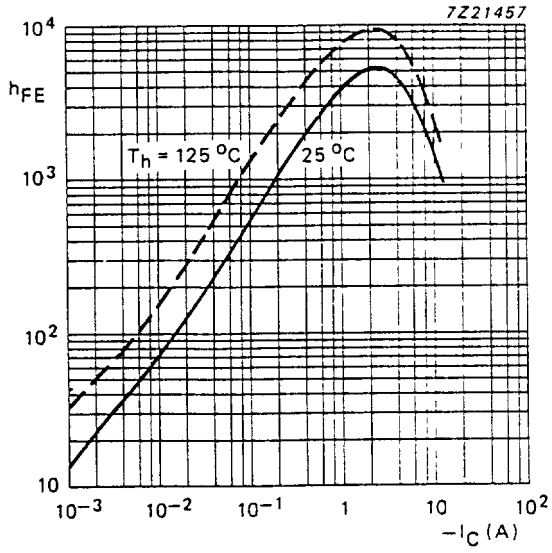

Fig. 8 Typical DC current gain as a function of collector current; $-V_{CE}$ = 4 V; T_j = 25 °C.

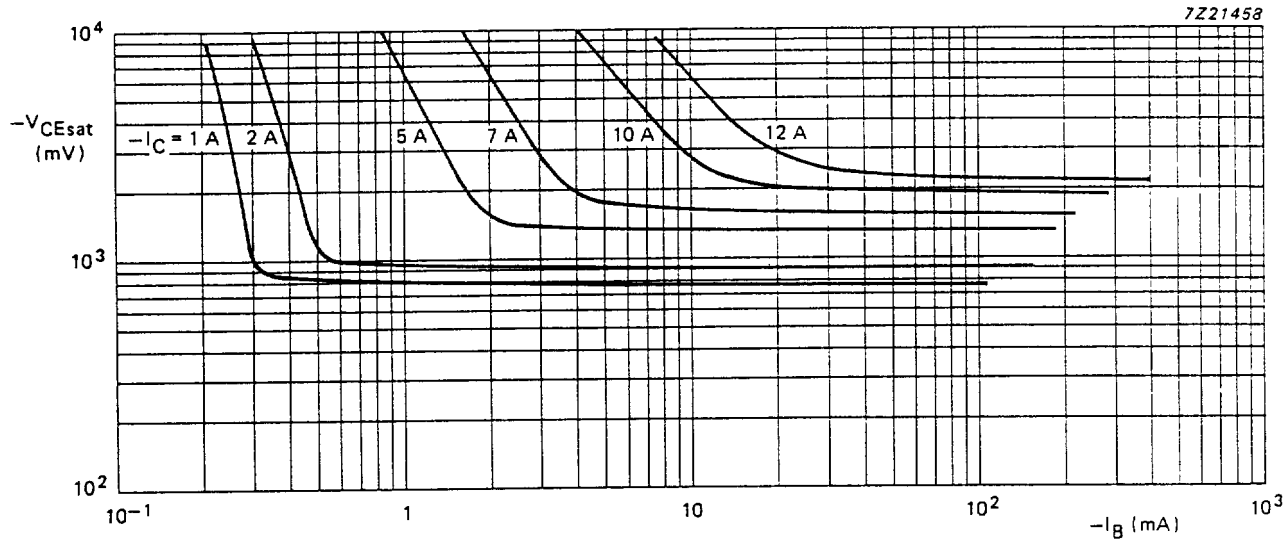

Fig. 9 Typical collector-emitter saturation voltages; T_h = 25 °C.