STRUCTURE Silicon Monolithic Integrated Circuit

PRODUCT NAME 1ch DC／DC Converter IC built in synchronous rectifier

TYPE **BD9123MUV**

FEATURES
- Output Voltage：3 bit Adjustable Setting (0.85~1.2V)
- Output Current：1.2A
- High Efficiency and Fast Transient Response

○ABSOLUTE MAXIMUM RATING (Ta=25℃)

Parameter	Symbol	Limit	Unit
Power Supply Voltage	VCC	-0.3～+7 *1	V
	PVCC	-0.3～+7 *1	V
EN, SW, ITH Voltage	EN, SW, ITH	-0.3～+7	V
Logic Input Voltage	VID<2:0>	-0.3～+7	V
Power Dissipation 1	Pd1	0.27 *2	W
Power Dissipation 2	Pd2	0.62 *3	W
Power Dissipation 3	Pd3	1.77 *4	W
Power Dissipation 4	Pd4	2.66 *5	W
Operating Temperature Range	Topr	-40～+95	℃
Storage Temperature Range	Tstg	-55～+150	℃
Maximum Junction Temperature	Tjmax	+150	℃

*1 Pd, ASO, and Tjmax=150℃ should not be exceeded.
*2 IC only.
*3 1 layer, mounted on a board 74.2mm×74.2mm×1.6mm Glass-epoxy PCB (Copper foil area : 6.28mm^2)
*4 4 layers, mounted on a board 74.2mm×74.2mm×1.6mm Glass-epoxy PCB (Copper foil area in 1,4layer : 6.28mm^2, Copper foil area in 2,3layer : 5505 mm^2)
*5 4 layers, mounted on a board 74.2mm×74.2mm×1.6mm Glass-epoxy PCB (Copper foil area : 5505mm^2) , copper foil in each layers.

○OPERATING CONDITIONS (Ta=-40～+95℃)

Parameter	Symbol	Min.	Typ.	Max.	Unit
Vcc Voltage	VCC	2.7	3.3	5.5	V
PVcc Voltage	PVCC	2.7	3.3	5.5	V
EN Voltage	EN	0	-	VCC	V
Logic Input Voltage	VID<2:0>	0	-	5.5	V
Output Voltage range	VOUT	0.85	-	1.2	V
SW Average Output Current	ISW	-	-	1.2*6	A

*6 Pd and ASO should not be exceeded.

This product is not designed for protection against radioactive rays.

Status of this document
The Japanese version of this document is the formal specification. A customer may use this translation version only for a reference to help reading the formal version. If there are any differences in translation version of this document, formal version takes priority.

○ELECTRICAL CHARACTERISTICS

(Unless otherwise specified, Ta=25℃, VCC=PVCC=5V, EN=VCC, VID<2>=VID<1>=VID<0>= 0V)

Parameter	Symbol	Limit			Unit	Condition
		Min.	Typ.	Max.		
Standby Current	ISTB	-	0	10	μA	EN=GND
Bias Current	ICC	-	300	500	μA	
EN Low Voltage	VENL	-	GND	0.8	V	Standby mode
EN High Voltage	VENH	2.0	Vcc	-	V	Active mode
EN Input Current	IEN	-	5	10	μA	VEN=5V
VID Low Voltage	VVIDL	-	GND	0.8	V	
VID High Voltage	VVIDH	2.0	Vcc	-	V	
VID Input Current	IVID	-	5	10	μA	VVID=5V
Oscillation Frequency	FOSC	0.8	1	1.2	MHz	
Pch FET ON Resistance	RONP	-	0.35	0.60	Ω	PVcc=5V
Nch FET ON Resistance	RONN	-	0.25	0.50	Ω	PVcc=5V
Output Voltage	VOUT	0.98	1.0	1.02	V	VID<2:0>=(0,0,0) setting
ITH SINK Current	ITHSI	25	50	-	μA	VOUT=1.2V
ITH Source Current	ITHSO	25	50	-	μA	VOUT=0.8V
UVLO Threshold Voltage	VUVLO1	2.4	2.5	2.6	V	Vcc=5V→0V
UVLO Release Voltage	VUVLO2	2.425	2.55	2.7	V	Vcc=0V→5V
Power Good Threshold	VPGOOD1	70	75	80	%	VOUT→0V
Power Good Release	VPGOOD2	85	90	95	%	0V→VOUT
Power Good Delay	TPG	2.5	5	10	ms	
Power Good ON Resistance	RONPG	-	140	280	Ω	
Soft Start Time	TSS	0.4	0.8	1.6	ms	
Timer Latch Time	TLATCH	1	2	4	ms	
Output Short Circuit Threshold Voltage	VSCP	-	VOUT × 0.5	VOUT × 0.7	V	VOUT→0V

○PHYSICAL DIMENSION

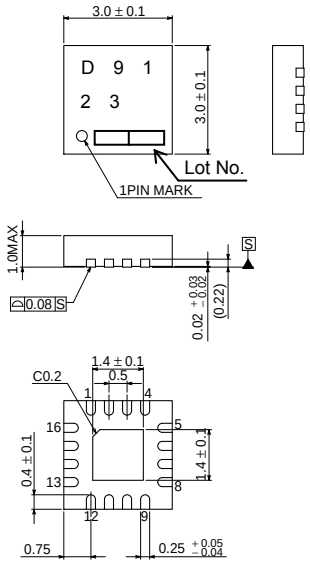

VQFN016V3030 (Unit:mm)

○BLOCK DIAGRAM・APPLICATION CIRCUIT

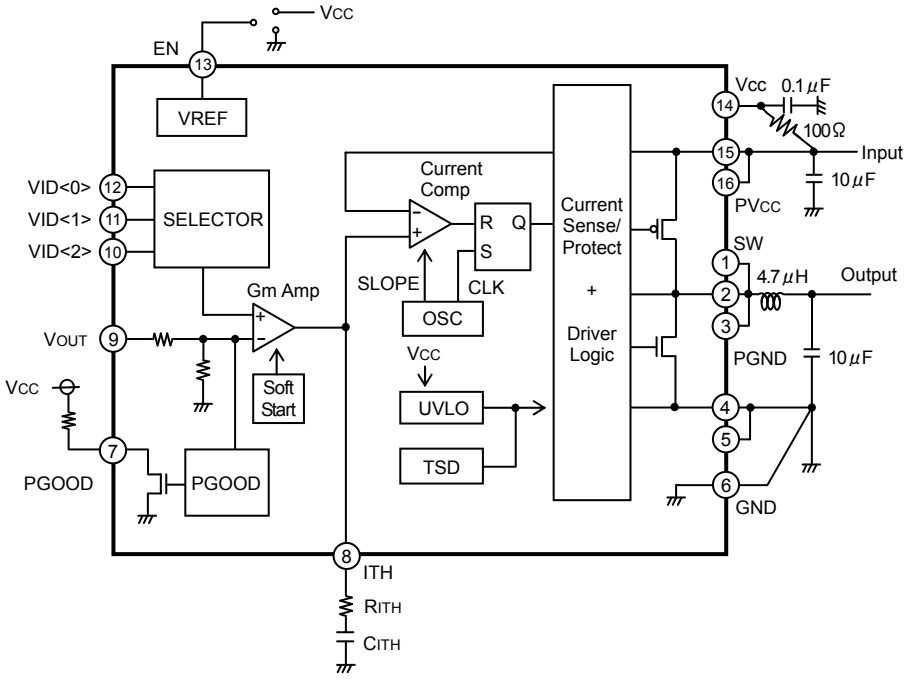

○Pin Layout

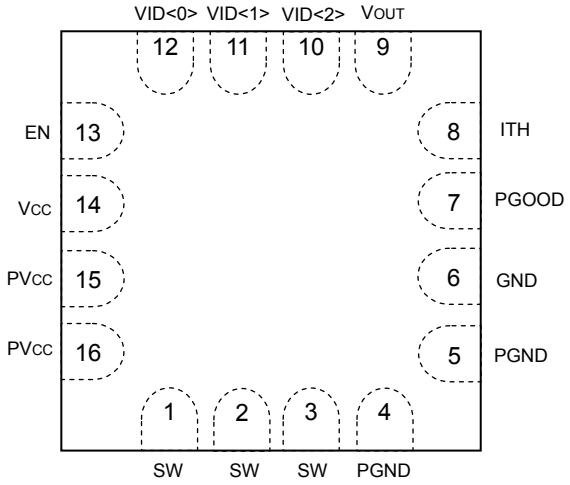

Top View

Pin No.	Pin name	Function
1	SW	Pch/Nch FET Drain Output Pin
2		
3		
4	PGND	Nch FET Source Pin
5		
6	GND	GND pin
7	PGOOD	Power Good Pin
8	ITH	Gm Amp output/ Phase compensation filter connected pin
9	VOUT	Output Voltage Setting Pin
10	VID<2>	Output Voltage Setting Pin <2>
11	VID<1>	Output Voltage Setting Pin <1>
12	VID<0>	Output Voltage Setting Pin <0>
13	EN	Enable Pin (High active)
14	VCC	Vcc Power Supply Input Pin
15	PVCC	Pch FET Source Pin
16		

○Output Voltage Setting Table

VID<2>	VID<1>	VID<0>	VOUT
0	0	0	1.0V
0	0	1	0.85V
0	1	0	0.9V
0	1	1	0.95V
1	0	0	1.05V
1	0	1	1.1V
1	1	0	1.15V
1	1	1	1.2V

*VOUT change starts after 10μs pass from the bit change.

*The time of 1step for VOUT (50mV shift) takes 5μs (max).

*The time that output voltage reaches the setting value, tVID (max) is 0.06ms.

ONOTES FOR USE

(1) Absolute Maximum Ratings

We are careful enough for quality control about this IC. So, there is no problem under normal operation, excluding that it exceeds the absolute maximum ratings. However, this IC might be destroyed when the absolute maximum ratings, such as impressed voltages or the operating temperature range, is exceeded, and whether the destruction is short circuit mode or open circuit mode cannot be specified. Pleases take into consideration the physical countermeasures for safety, such as fusing, if a particular mode that exceeds the absolute maximum rating is assumed.

(2) GND Potential

Make setting of the potential of the GND terminal so that it will be maintained at the minimum in any operating state. Furthermore, check to be sure no terminals are at a potential lower than the GND voltage except for SW, PGND, GND terminals including an actual electric transient.

(3) Thermal design

Do not exceed the power dissipation (Pd) of the package specification rating under actual operation, and please design enough temperature margins.

(4) Short circuit mode between terminals and wrong mounting

In order to mount the IC on a set PCB, pay thorough attention to the direction and offset of the ICs. Erroneous mounting can destroy the IC. Furthermore, if a short circuit occurs due to foreign matters entering between terminals or between the terminal and the power supply or the GND terminal, the IC can destroy

(5) Operation in Strong electromagnetic field

Be noted that using the IC in the strong electromagnetic radiation can cause operation failures.

(6) ASO (Area of Safety Operation.)

Do not exceed the maximum ASO and the absolute maximum ratings of the output driver.

(7) TSD (Thermal Shut-Down) circuit

The thermal shutdown circuit (TSD circuit) is built in this product. When IC chip temperature becomes higher, the thermal shutdown circuit operates and turns output off. The guarantee and protection of IC are not purpose. Therefore, please do not use this IC after TSD circuit operates, nor use it for assumption that operates the TSD circuit.

(8) GND wiring pattern

Use separate ground lines for control signals and high current power driver outputs. Because these high current outputs that flows to the wire impedance changes the GND voltage for control signal. Therefore, each ground terminal of IC must be connected at the one point on the set circuit board. As for GND of external parts, it is similar to the above-mentioned.

(9) Operation in supply voltage range

Functional Circuit operation is guaranteed within operation ambient temperature, as long as it is within operation supply voltage range. The electrical characteristics standard value cannot be guaranteed.
However, there is no drastic variation in these values, as long as it is within operation supply voltage range.

(10) We are confident in recommending the above application circuit example, but we ask that you carefully check the characteristics of this circuit before using it. If using this circuit after modifying other external circuit constants, be careful to ensure adequate margins for variation between external devices and this IC, including not only static characteristics but also transient characteristics. If switching noise is high, please insert the schottky barrier diodes between SW pin and PGND pin.

(11) Overcurrent protection circuit

The overcurrent protection circuit is built in the output. If the protection circuit operates more than for specific hours (when the load is short.), the output will be latched in OFF. The output returns when EN is turned on or UVLO is released again. These protection circuits are effective in the destruction prevention by broken accident. Please do not use in continuous circuit operation.

(12) Selection of inductor

It is recommended to use an inductor with a series resistance element (DCR) 0.15Ω or less. Note that use of a high DCR inductor will cause an inductor loss, resulting in decreased output voltage. Should this condition continue for a specified period (soft start time + timer latch time), output short circuit protection will be activated and output will be latched OFF. When using an inductor over 0.15Ω, be careful to ensure adequate margins for variation between external devices and this IC, including transient as well as static characteristics.

Notes

No copying or reproduction of this document, in part or in whole, is permitted without the consent of ROHM Co.,Ltd.

The content specified herein is subject to change for improvement without notice.

The content specified herein is for the purpose of introducing ROHM's products (hereinafter "Products"). If you wish to use any such Product, please be sure to refer to the specifications, which can be obtained from ROHM upon request.

Examples of application circuits, circuit constants and any other information contained herein illustrate the standard usage and operations of the Products. The peripheral conditions must be taken into account when designing circuits for mass production.

Great care was taken in ensuring the accuracy of the information specified in this document. However, should you incur any damage arising from any inaccuracy or misprint of such information, ROHM shall bear no responsibility for such damage.

The technical information specified herein is intended only to show the typical functions of and examples of application circuits for the Products. ROHM does not grant you, explicitly or implicitly, any license to use or exercise intellectual property or other rights held by ROHM and other parties. ROHM shall bear no responsibility whatsoever for any dispute arising from the use of such technical information.

The Products specified in this document are intended to be used with general-use electronic equipment or devices (such as audio visual equipment, office-automation equipment, communication devices, electronic appliances and amusement devices).

The Products specified in this document are not designed to be radiation tolerant.

While ROHM always makes efforts to enhance the quality and reliability of its Products, a Product may fail or malfunction for a variety of reasons.

Please be sure to implement in your equipment using the Products safety measures to guard against the possibility of physical injury, fire or any other damage caused in the event of the failure of any Product, such as derating, redundancy, fire control and fail-safe designs. ROHM shall bear no responsibility whatsoever for your use of any Product outside of the prescribed scope or not in accordance with the instruction manual.

The Products are not designed or manufactured to be used with any equipment, device or system which requires an extremely high level of reliability the failure or malfunction of which may result in a direct threat to human life or create a risk of human injury (such as a medical instrument, transportation equipment, aerospace machinery, nuclear-reactor controller, fuel-controller or other safety device). ROHM shall bear no responsibility in any way for use of any of the Products for the above special purposes. If a Product is intended to be used for any such special purpose, please contact a ROHM sales representative before purchasing.

If you intend to export or ship overseas any Product or technology specified herein that may be controlled under the Foreign Exchange and the Foreign Trade Law, you will be required to obtain a license or permit under the Law.

ROHM SEMICONDUCTOR

Thank you for your accessing to ROHM product informations.
More detail product informations and catalogs are available, please contact us.

ROHM Customer Support System

http://www.rohm.com/contact/

© 2009 ROHM Co., Ltd. All rights reserved.