● Structure Silicon Monolithic Integrated Circuit

● Product Name Step-up DC/DC converter for medium size LCD panel

● Type **BD6586MUV**

● Features High efficiency PWM step-up DC/DC converter (fsw=1MHz)
High accuracy and good matching current driver 4ch
Drive up to 6 in series × 4 strings in parallel =24white LEDs
(*white LED Vf=4.0Vmax)

●Absolute maximum ratings (Ta=25°C)

Parameter	Symbol	Limits	Unit	Condition
Maximum applied voltage 1	VMAX1	7	V	VBAT, EN1, EN2, TRSW, PWM, TESTO, ISET, TEST
Maximum applied voltage 2	VMAX2	25	V	LED1, LED2, LED3, LED4,
Maximum applied voltage 3	VMAX3	30.5	V	SW
Maximum applied voltage 4	VMAX4	50.5	V	VDET
Power dissipation 1	Pd1	500	mW	*1
Power dissipation 2	Pd2	780	mW	*2
Power dissipation 3	Pd3	1510	mW	*3
Operating temperature range	Topr	-40 ~ +85	°C	-
Storage temperature range	Tstg	-55 ~ +150	°C	-

(*1) It will be reduced every 4.0mW/°C (Ta>25°C) when it's not mounted on a heat radiation Board.
(*2) it will be reduced every 6.2mW/°C (Ta>25°C) when It's not mounted on 1 layer board (ROHM Standard board) and Copper foil area 0mm^2
(*3) It will be reduced every 12.1mW/°C (Ta>25°C) when it's mounted on 4 layer board (JEDEC Compliant board) and Copper foil area 6.28mm^2 on 1st layer and Copper foil area 5655.04mm^2. 2nd-4th layer.

●Operating conditions (Ta=-40 to +85°C)

Parameter	Symbol	Rating			Unit	Condition
		Min.	Typ.	Max.		
Supply voltage	VBAT		2.7 ~ 5.5		V	

This product isn't designed to protect itself against radioactive rays.

Status of this document
The English version of this document is the formal specification.
A customer may use this translation version only for a reference to help reading the formal version.
If there are any differences in translation version of this document, formal version takes priority.

Application example
- ROHM cannot provide adequate confirmation of patents.
- The product described in this specification is designed to be used with ordinary electronic equipment or devices (such as audio-visual equipment,
  office-automation equipment, communications devices, electrical appliances, and electronic toys).
  Should you intend to use this product with equipment or devices which require an extremely high level of reliability and the malfunction of which would directly endanger human life (such as medical instruments, transportation equipment, aerospace machinery, nuclear-reactor controllers, fuel
  controllers and other safety devices), please be sure to consult with our sales representative in advance.
- ROHM assumes no responsibility for use of any circuits described herein, conveys no license under any patent or other right, and makes no representations that the circuits are free from patent infringement.

●Electrical Characteristics

(Unless otherwise noted, VBAT=3.6V, Ta = +25°C)

Parameter	Symbol	Spec			Unit	Condition
		Min.	Typ.	Max.		
EN1, EN2, PWM Pin						
Low Input Voltage range	VthL	0	-	0.4	V	
High Input Voltage range	VthH	1.4	-	5.5	V	
Input current	Iin	-	8.3	16.0	μA	Input voltage=2.5V
UVLO						
Under Voltage Lock Out	UVLO	2.05	2.35	2.65	V	VBAT falling edge
Switching Regulator						
Quiescent Current	Iq	-	0.1	2.0	μA	EN1=EN2=PWM=0V
Current Consumption	Idd	-	2.2	4.6	mA	VDET=0V,ISET=24kΩ
LED Control voltage	VLED	0.4	0.5	0.6	V	
Over Current Limit	Ocp	1.1	1.5	2.5	A	*1
SBD Open Protect	Sop	-	-	0.1	V	Detect voltage of VDET pin
Switching frequency	fSW	0.7	1.0	1.3	MHz	
Duty cycle limit	Duty	91	95	99	%	LED1-4=0.3V
Over Voltage Limit	Ovl	25.0	25.5	26.0	V	LED1-4=0.3V
SW Transistor On Resistance	RSW	-	0.24	0.32	Ω	Isw=100mA
Current driver						
LED maximum current	ILMAX	-	-	25	mA	
LED current accuracy	ILACCU	-	-	±5	%	ILED=20mA
LED current matching	ILMAT	-	-	±3	%	▪Each LED current/Average (LED1- 4 current) ▪ILED=20mA
ISET voltage	Iset	0.5	0.6	0.7	V	
LED current limiter	ILOCP	35	60	90	mA	ISET resistance 4.7kΩ LED1- 4 =0.5V
LED Terminal Over Voltage Protect	LEDOVP	10.0	11.5	13.0	V	EN1=EN2=PWM=2.5V

*1. This parameter is tested with dc measurement

●Package outline drawing

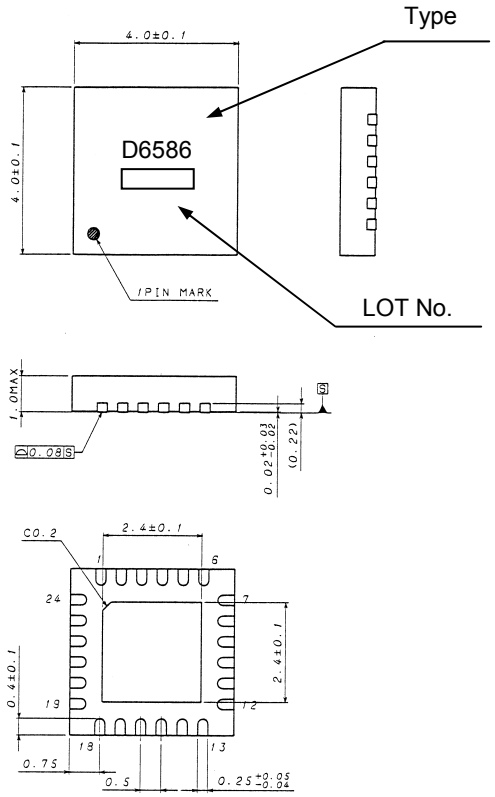

(VQFN024V4040) (Unit : mm)

●Terminals

PIN	PIN Name
1	VBAT
2	EN1
3	EN2
4	GND
5	PWM
6	ISET
7	GND
8	LED1
9	LED2
10	GND
11	LED3
12	LED4
13	TEST
14	TESTO
15	N.C.
16	SW
17	SW
18	SW
19	VDET
20	N.C.
21	PGND
22	PGND
23	N.C.
24	TRSW

●Block diagram

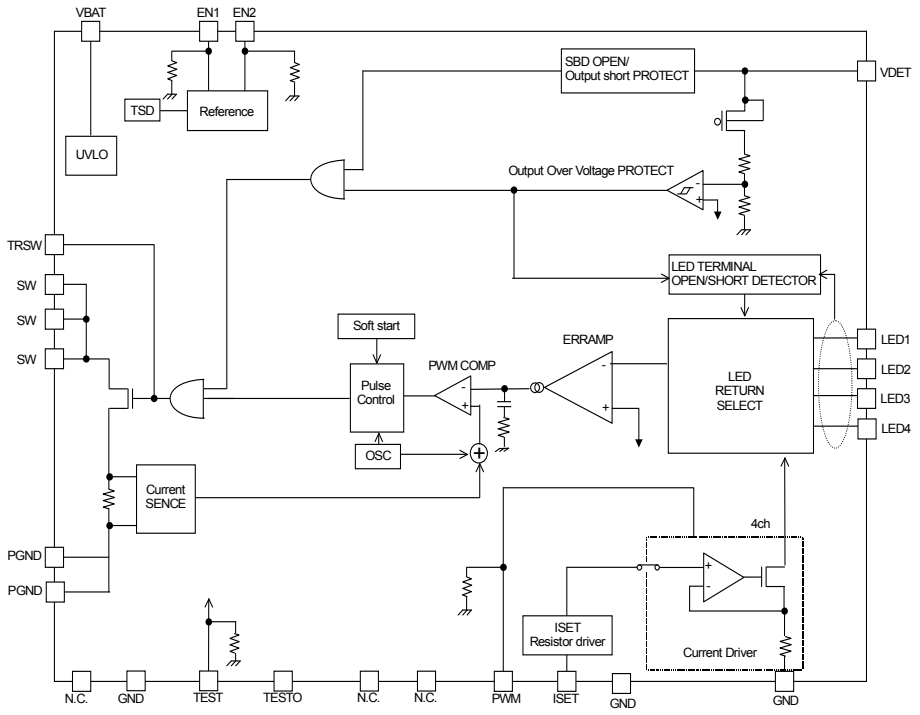

●Cautions on use

(1) Absolute Maximum Ratings

An excess in the absolute maximum ratings, such as supply voltage, temperature range of operating conditions, etc., can break down devices, thus making impossible to identify breaking mode such as a short circuit or an open circuit. If any special mode exceeding the absolute maximum ratings is assumed, consideration should be given to take physical safety measures including the use of fuses, etc.

(2) Power supply and GND line

Design PCB pattern to provide low impedance for the wiring between the power supply and the GND lines. Pay attention to the interference by common impedance of layout pattern when there are plural power supplies and GND lines. Especially, when there are GND pattern for small signal and GND pattern for large current included the external circuits, please separate each GND pattern. Furthermore, for all power supply terminals to ICs, mount a capacitor between the power supply and the GND terminal. At the same time, in order to use a capacitor, thoroughly check to be sure the characteristics of the capacitor to be used present no problem including the occurrence of capacity dropout at a low temperature, thus determining the constant.

(3) GND voltage

Make setting of the potential of the GND terminal so that it will be maintained at the minimum in any operating state. Furthermore, check to be sure no terminals are at a potential lower than the GND voltage including an actual electric transient.

(4) Short circuit between terminals and erroneous mounting

In order to mount ICs on a set PCB, pay thorough attention to the direction and offset of the ICs. Erroneous mounting can break down the ICs. Furthermore, if a short circuit occurs due to foreign matters entering between terminals or between the terminal and the power supply or the GND terminal, the ICs can break down.

(5) Operation in strong electromagnetic field

Be noted that using ICs in the strong electromagnetic field can malfunction them.

(6) Input terminals

In terms of the construction of IC, parasitic elements are inevitably formed in relation to potential. The operation of the parasitic element can cause interference with circuit operation, thus resulting in a malfunction and then breakdown of the input terminal. Therefore, pay thorough attention not to handle the input terminals, such as to apply to the input terminals a voltage lower than the GND respectively, so that any parasitic element will operate. Furthermore, do not apply a voltage to the input terminals when no power supply voltage is applied to the IC. In addition, even if the power supply voltage is applied, apply to the input terminals a voltage lower than the power supply voltage or within the guaranteed value of electrical characteristics. And, as the unused input terminals may make unstable state occur in the internal circuit, please connect them to I/O GND.

(7) External capacitor

In order to use a ceramic capacitor as the external capacitor, determine the constant with consideration given to a degradation in the nominal capacitance due to DC bias and changes in the capacitance due to temperature, etc.

(8) Thermal shutdown circuit (TSD)

When junction temperatures become 175°C (typ) or higher, the thermal shutdown circuit operates and turns a switch OFF. The thermal shutdown circuit, which is aimed at isolating the LSI from thermal runaway as much as possible, is not aimed at the protection or guarantee of the LSI. Therefore, do not continuously use the LSI with this circuit operating or use the LSI assuming its operation.

(9) Thermal design

Perform thermal design in which there are adequate margins by taking into account the permissible dissipation (Pd) in actual states of use.

(10) DC/DC converter

Please select the low DCR inductors to decrease power loss for DC/DC converter.

Notes

- No technical content pages of this document may be reproduced in any form or transmitted by any means without prior permission of ROHM CO.,LTD.
- The contents described herein are subject to change without notice. The specifications for the product described in this document are for reference only. Upon actual use, therefore, please request that specifications to be separately delivered.
- Application circuit diagrams and circuit constants contained herein are shown as examples of standard use and operation. Please pay careful attention to the peripheral conditions when designing circuits and deciding upon circuit constants in the set.
- Any data, including, but not limited to application circuit diagrams information, described herein are intended only as illustrations of such devices and not as the specifications for such devices. ROHM CO.,LTD. disclaims any warranty that any use of such devices shall be free from infringement of any third party's intellectual property rights or other proprietary rights, and further, assumes no liability of whatsoever nature in the event of any such infringement, or arising from or connected with or related to the use of such devices.
- Upon the sale of any such devices, other than for buyer's right to use such devices itself, resell or otherwise dispose of the same, no express or implied right or license to practice or commercially exploit any intellectual property rights or other proprietary rights owned or controlled by
- ROHM CO., LTD. is granted to any such buyer.
- Products listed in this document are no antiradiation design.

The products listed in this document are designed to be used with ordinary electronic equipment or devices (such as audio visual equipment, office-automation equipment, communications devices, electrical appliances and electronic toys).
Should you intend to use these products with equipment or devices which require an extremely high level of reliability and the malfunction of which would directly endanger human life (such as medical instruments, transportation equipment, aerospace machinery, nuclear-reactor controllers, fuel controllers and other safety devices), please be sure to consult with our sales representative in advance.
It is our top priority to supply products with the utmost quality and reliability. However, there is always a chance of failure due to unexpected factors. Therefore, please take into account the derating characteristics and allow for sufficient safety features, such as extra margin, anti-flammability, and fail-safe measures when designing in order to prevent possible accidents that may result in bodily harm or fire caused by component failure. ROHM cannot be held responsible for any damages arising from the use of the products under conditions out of the range of the specifications or due to non-compliance with the NOTES specified in this catalog.

Thank you for your accessing to ROHM product informations.
More detail product informations and catalogs are available, please contact your nearest sales office.

ROHM Customer Support System

THE AMERICAS / EUROPE / ASIA / JAPAN

www.rohm.com

Contact us : webmaster@rohm.co.jp

Copyright © 2008 ROHM CO.,LTD.

ROHM CO., LTD. 21 Saiin Mizosaki-cho, Ukyo-ku, Kyoto 615-8585, Japan
TEL : +81-75-311-2121
FAX : +81-75-315-0172