STRUCTURE Silicon monolithic integrated circuit

PRODUCT SERIES H-bridge driver for DC brush motor

TYPE **BD6231HFP**

FEATURES
- Voltage setting pin enables for PWM duty control
- Supports PWM control signal input

O ABSOLUTE MAXIMUM RATINGS (Ta=25°C)

Parameter	Symbol	Ratings	Unit
Supply voltage	VCC	36	V
Output current	IOMAX	1.0 *1	A
All other input pins	VIN	-0.3 ~ VCC	V
Operating temperature	TOPR	-40 ~ +85	°C
Storage temperature	TSTG	-55 ~ +150	°C
Power dissipation	Pd	1.4 *2	W
Junction temperature	Tjmax	150	°C

*** Notes: All voltages are with respect to ground.

*1 Do not, exceed Pd or ASO.

*2 Mounted on a 70mm x 70mm x 1.6mm FR4 glass-epoxy board with thermal via and 2.25% copper foil. Derated at 11.2mW/°C above 25°C.

O OPERATING CONDITIONS (Ta=25°C)

Parameter	Symbol	Limits	Unit
Supply voltage	VCC	6 ~ 32	V
VREF voltage	VREF	3 ~ 32	V

This product is not designed for protection against radioactive rays.

Status of this document
The Japanese version of this document is the formal specification.
A customer may use this translation version only for a reference to help reading the formal version.
If there are any differences in translation version of this document, formal version takes priority.

O ELECTRICAL CHARACTERISTICS (Unless otherwise specified, Ta=25°C and VCC=VREF=24V)

Parameter	Symbol	Limits			Unit	Conditions
		Min.	Typ.	Max.		
Supply current	ICC	0.8	1.3	2.5	mA	Forward / Reverse / Brake
Stand-by current	ISTBY	-	0	10	μA	Stand-by
Input high voltage	VIH	2.0	-	-	V	
Input low voltage	VIL	-	-	0.8	V	
Input bias current	IIH	30	50	100	μA	VIN=5.0V
Output ON resistance	RON	1.0	1.5	2.5	Ω	IO=0.5A, vertically total
VREF bias current	IVREF	-10	0	10	μA	VREF=VCC
Carrier frequency	FPWM	20	25	35	kHz	VREF=18V
Input frequency range	FMAX	20	-	100	kHz	FIN / RIN

O PHYSICAL DIMENSIONS AND MARKING

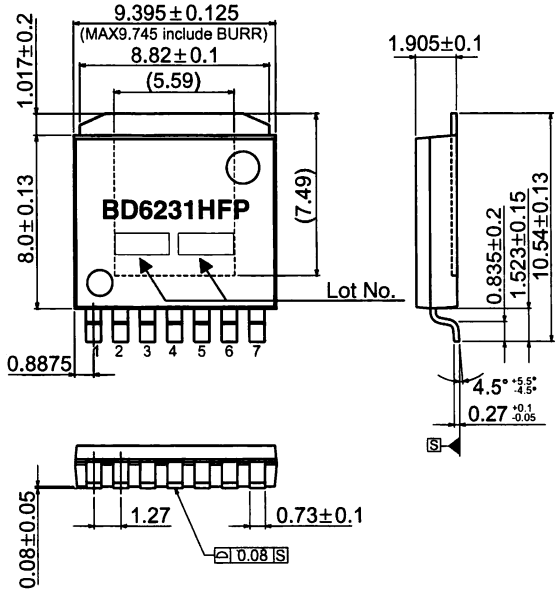

HRP7 (Unit: [mm])

O BLOCK DIAGRAM

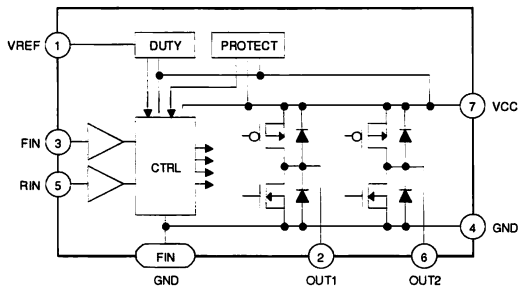

O PIN DESCRIPTIONS

Pin	Name
1	VREF
2	OUT1
3	FIN
4	GND
5	RIN
6	OUT2
7	VCC
FIN	GND

O NOTES FOR USE

1) Absolute maximum ratings
Devices may be destroyed when supply voltage or operating temperature exceeds the absolute maximum rating. Because the cause of this damage cannot be identified as, for example, a short circuit or an open circuit, it is important to consider circuit protection measures – such as adding fuses – if any value in excess of absolute maximum ratings is to be implemented.

2) Connecting the power supply connector backward
Connecting the power supply in reverse polarity can damage the IC. Take precautions against reverse polarity when connecting the power supply lines, such as adding an external direction diode.

3) Power supply lines
Return current generated by the motor's Back-EMF requires countermeasures, such as providing a return current path by inserting capacitors across the power supply and GND. In this case, it is important to conclusively confirm that none of the negative effects sometimes seen with electrolytic capacitors – including a capacitance drop at low temperatures - occurs. Also, the connected power supply must have sufficient current absorbing capability. Otherwise, the regenerated current will increase voltage on the power supply line, which may in turn cause problems with the product, including peripheral circuits exceeding the absolute maximum rating. To help protect against damage or degradation, physical safety measures should be taken, such as providing a voltage clamping diode across the power supply and GND.

4) Electrical potential at GND
Keep the GND terminal potential to the minimum potential under any operating condition. In addition, check to determine whether there is any terminal that provides voltage below GND, including the voltage during transient phenomena. When both a small signal GND and high current GND are present, single-point grounding (at the set's reference point) is recommended, in order to separate the small signal and high current GND, and to ensure that voltage changes due to the wiring resistance and high current do not affect the voltage at the small signal GND. In the same way, care must be taken to avoid changes in the GND wire pattern in any external connected component.

5) Thermal design
Use a thermal design that allows for a sufficient margin in light of the power dissipation (Pd) under actual operating conditions.

6) Inter-pin shorts and mounting errors
Use caution when positioning the IC for mounting on printed circuit boards. The IC may be damaged if there is any connection error, or if pins are shorted together.

7) Operation in strong electromagnetic fields
Using this product in strong electromagnetic fields may cause IC malfunctions. Use extreme caution with electromagnetic fields.

8) ASO - Area of Safety Operation
When using the IC, set the output transistor so that it does not exceed absolute maximum ratings or ASO.

9) Built-in thermal shutdown (TSD) circuit
The TSD circuit is designed only to shut the IC off to prevent thermal runaway. It is not designed to protect the IC or guarantee its operation in the presence of extreme heat. Do not continue to use the IC after the TSD circuit is activated, and do not operate the IC in an environment where activation of the circuit is assumed.

10) Capacitor between output and GND
In the event a large capacitor is connected between the output and GND, if VCC and VIN are short-circuited with 0V or GND for any reason, the current charged in the capacitor flows into the output and may destroy the IC. Use a capacitor smaller than 1μF between output and GND.

11) Testing on application boards
When testing the IC on an application board, connecting a capacitor to a low impedance pin subjects the IC to stress. Therefore, always discharge capacitors after each process or step. Always turn the IC's power supply off before connecting it to or removing it from the test setup during the inspection process. Ground the IC during assembly steps as an antistatic measure. Use similar precaution when transporting or storing the IC.