Structure : Silicon Monolithic Integrated Circuit

Product : Audio sound controller

Type : **BD3881FV**

Feature :

1. Dual built-in recording and playing preamplifiers for cassette tapes
   Less external components allows a compact size of the set.

2. The shock sound at power-ON/OFF is absorbed by both power sources.
   The reference voltage of signal systems is designed to be a ground level so that low offset voltage and low noise are achieved.

Absolute Maximum Ratings (Ta=25°C)

Parameter	Symbol	Limits	Unit
Power Supply Voltage	VDD	5	V
	VEE	-5	
Power Dissipation	Pd	850※	mW
Operating Temperature	Topr	−20～+75	°C
Storage Temperature	Tastg	−55～+125	°C

※Over Ta=25°C, derating at the rate of 8.5mW/°C.
When installed on the standard board (Size: 70×70×1.6mm).

Operating Voltage Range

Symbol	Limit	Unit
VDD	3.5～4.75	V
VEE	-4.75～-3.5	V

(It must function normally at Ta = 25°C)

Application example
Note that ROHM cannot provide adequate confirmation of patents.
The product described in this specification is designed to be used with ordinary electronic equipment or devices (such as audio-visual equipment, office-automation equipment, communications devices, electrical appliances, and electronic toys).
Should you intend to use this product with equipment or devices which require an extremely high level of reliability and the malfunction of which would directly endanger human life (such as medical instruments, transportation equipment, aerospace machinery, nuclear-reactor controllers, fuel controllers and other safety devices), please be sure to consult with our sales representative in advance.

Electrical characteristics

(Ta = 25°C, VDD = 4.5V, VEE = −4.5V, f = 1kHz, Vin = 50mVrms, Rg = 600Ω,
RL = 10kΩ, Input Selector = Ach, Volume=0dB, Bass=0dB, Treble=0dB, unless otherwise noted.)

	Parameter	Symbol	Limit			Unit	Conditions
			Min.	Typ.	Max.		
GENERAL	VDD Circuit Current	IQVDD	−	3.0	8.0	mA	Vin = 0Vrms
	VEE Circuit Current	IQVEE	−8.0	−3.0	−		
	Ach Maximum Input Voltage	Vaim	0.6	0.8	−	Vrms	THD(Vout) =1%, BPF = 400～30kHz Volume = −24dB
	Bch Maximum Input Voltage	Vbim					
	Cch Maximum Input Voltage	Vcim					
	Maximum Input Voltage TP	Vimtp	0.6	0.8	−	Vrms	THD(Vout)=1%, BPF = 400～30kHz GAIN = 10dB Input Selector = TP
	Maximum Output Voltage	Vom	2.2	2.5	−	Vrms	THD = 1%, BPF = 400～30kHz
	Voltage Gain	Gv	26	28	30	dB	Gv = 20log(Vout/Vin)
	Channel Balance	CB	−1.5	0	1.5	dB	CB = Gv1−Gv2
	Total Harmonic Distortion Ratio	THD	−	0.02	0.1	%	BPF = 400−30KHz
	Output Noise Voltage *	Vno	−	12	20	μVrms	Volume = 0dB～−84dB BPF = IHF−A, Rg=0Ω Input Point = Pin7, Pin8
	Residual Noise Voltage *	Vmno	−	12	20	μVrms	Volume = 0dB～−84dB BPF = IHF−A, Rg=0Ω Input Point = Pin7, Pin8
	Cross−talk between Channels *	CT	70	85	−	dB	CT = 20log(Vin/Vout) BPF = IHF−A, Rg = 0Ω
INPUT	Voltage Gain A	Gva	8	10	12	dB	
	Voltage Gain B	Gvb					
	Voltage Gain C	Gvc					
	Cross−talk between Selectors A1ch→B1ch *	CTab1	—	−110	−70	dB	Rg = 0Ω, BPF = IHF−A Vin=500mVrms
	Cross−talk between Selectors A2ch→B2ch *	CTab2					
	Cross−talk between Selectors B1ch→C1ch *	CTbc1					
	Cross−talk between Selectors B2ch→C2ch *	CTbc2					
	Cross−talk between Selectors C1ch→A1ch *	CTca1					
	Cross−talk between Selectors C2ch→A2ch *	CTca2					
	Output Impedance	Rsout	—	—	50	Ω	
RECODING EQ	Voltage Gain RC	Gvrc	38	40	42	dB	f=10kHz
	Maximum Output Voltage RC	Vomrc	2.2	2.5	−	Vrms	THD=1%, BPF=400～30kHz
	Input Conversion Noise Voltage RC	Vnorc	−	1.5	3.0	μVrms	Rg = 0Ω, BPF = IHF−A
	Slew Rate RC	Vtr	2	4	−	V/μS	
PLAY BACK EQ	Voltage Gain TP	Gvtp	44	46	48	dB	f=10kHz
	Maximum Output Voltage TP	Vomtp	2.2	2.5	−	Vrms	Input Selector = TP THD=1%, BPF=400～30kHz
	Input Conversion Noise Voltage TP	Vnotp	−	1.1	2.0	μVrms	Input Selector = TP Rg=2.2kΩ, BPF=IHF−A, Gv=20dB
VOLUME	Volume Maximum Input Voltage	Vimv	2.2	2.5	—	Vrms	THD(Vout)=1%, BPF=400～30kHz Volume ATT=−24dB
	Volume Input Impedance	Rvin	14	20	26	kΩ	
	Volume Control Range	Vr	−87	−84	−81	dB	BPF = IHF−A
	Volume Control Step 1	Sv1	−	2	−	dB	0dB to −36dB
	Volume Control Step 2	Sv2	−	4	−	dB	−36dB to −84dB
	Volume Setting Error 1	Ev1	−2	0	2	dB	0dB to −72dB
	Volume Setting Error 2	Ev2	−3	0	3	dB	−76dB to −84dB
	Volume Maximum Attenuation *	ATTm	—	−118	−90	dB	Volume=−∞, BPF=IHF−A, Vin=3Vrms, ATT=20log(Vout/Vin)−18dB

	Parameter	Symbol	Limit			Unit	Conditions
			Min.	Typ.	Max.		
BASS	Bass Boost Control Range	Gbbr	+18	+21	+24	dB	f = 70Hz, Vin = 5mVrms BASS = +21dB
	Bass Control Step	SBC	–	3	–	dB	f = 70Hz, Vin = 5mVrms
	Bass Setting Error (0dB～12dB)	EBS1	−2	0	2	dB	
	Bass Setting Error (15dB～21dB)	EBS2	−3	0	3	dB	
TREBLE	Treble Boost Control Range	Gtbr	+12	+14	+16	dB	f = 10kHz, Vin = 5mVrms TREBLE = +14dB (fc=300Hz)
	Treble Control Step	STC	–	2	–	dB	f = 10kHz Vin = 5mVrms
	Treble Setting Error	ETS	−2	0	2	dB	

※ The operational amplifier for PB should be used with the gain of 10dB or above.
※ For measurement, VP-9690A (Average value wave detection, Effective value display) IHF-A filter by Matsushita Communication Industrial is used.
※ Phase relation between Input/Output signal terminals is Equiphase.
※ Not designed for radiation resistance.

Outline dimension・Marking dimension

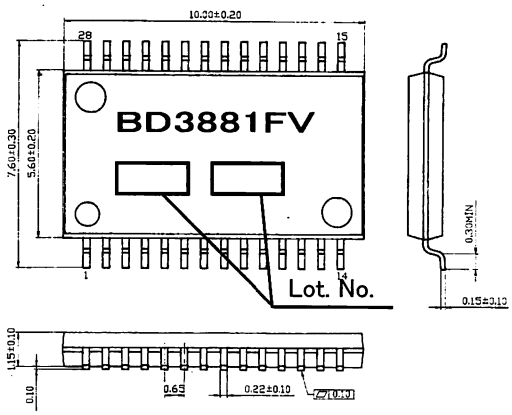

SSOP-B28 (Unit: mm)

Block Diagram

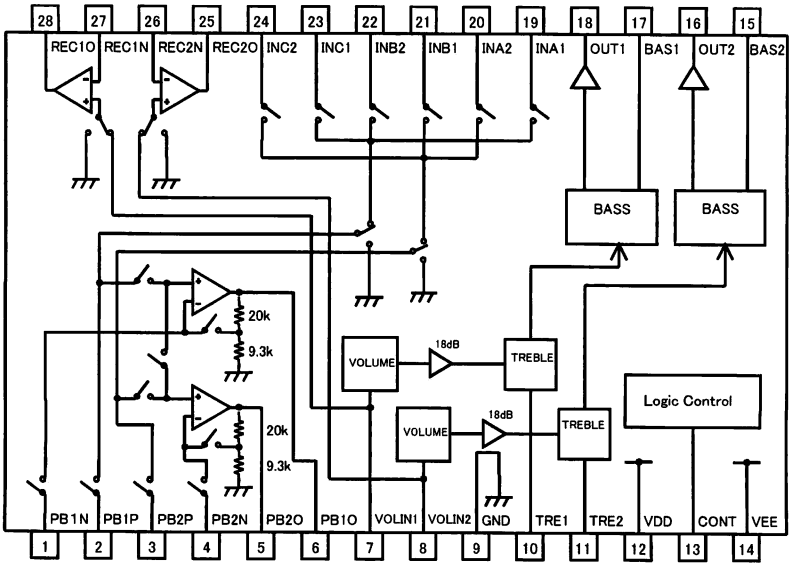

Unit: Resistance = Ω

Pin number・Pin name

Pin number	Pin name	Pin number	Pin name	Pin number	Pin name	Pin number	Pin name	Pin number	Pin name
1	PB1N	7	VOLIN1	13	CONT	19	INA1	25	REC2O
2	PB1P	8	VOLIN2	14	VEE	20	INA2	26	REC2N
3	PB2P	9	GND	15	BAS2	21	INB1	27	REC1N
4	PB2N	10	TRE1	16	OUT2	22	INB2	28	REC1O
5	PB2O	11	TRE2	17	BAS1	23	INC1		
6	PB1O	12	VDD	18	OUT1	24	INC2		

Cautions on use

1. About operating voltage range and operating temperature range

   Within the Operating Voltage Range and the Operating Temperature Range, while basic circuit functional operations are supposed to be guaranteed, the standard values of the electrical characteristics are guaranteed only when used under the specific conditions defined within these ranges. Thus, the users must verify those conditions before setting constants, elements, voltages, and temperatures. Note that the conditions of power dissipation are also affected with temperatures.

2. About power on reset

   A built-in circuit for performing initialization inside the IC at power-ON is provided. In the case of the set design, however, to be on the safe side, it is recommended that data shall be sent to all the addresses as initial data at power-ON and, until this sending operation is completed, the mute shall be applied.

Function	Initial Condition
Input Selector	MUTE
REC Output	REC MUTE
Karaoke	Stereo
Volume	-∞dB
Treble Gain	0dB
Bass Gain	0dB

3. About 1-wire serial control

   As the CONT terminal is designed for inputting a high-frequency digital signal, the wiring and layout patterns should be routed not to cause interference with the analog-signal-related lines.

4. About power ON/OFF

   Shock sound absorbing measures at power ON/OFF are implemented on 5pin, 6pin, 16pin, 18pin, 25pin, and 28pin. When booting up power supplies, the VEE side should be booted a little bit earlier than the other side. If the VDD side is booted up first, an excessive current may pass VDD through VEE. When booting off the power supply, the VDD side should be booted off a little bit earlier than the other side. Note that, at this time, voltage change passing through the GND level may produce an abnormally large current.

5. About function switching

   On switching between the Volume, Bass, Treble, and REC Mute functions, the action has been taken to absorb such switching shock sound. For the other function switching operations, a combined use of MUTE is recommendable. As measures against the switching shock sound of Karaoke, the bias resistances on 19pin through 24pin should be set to 10kΩ or less.

Notes

- No technical content pages of this document may be reproduced in any form or transmitted by any means without prior permission of ROHM CO.,LTD.
- The contents described herein are subject to change without notice. The specifications for the product described in this document are for reference only. Upon actual use, therefore, please request that specifications to be separately delivered.
- Application circuit diagrams and circuit constants contained herein are shown as examples of standard use and operation. Please pay careful attention to the peripheral conditions when designing circuits and deciding upon circuit constants in the set.
- Any data, including, but not limited to application circuit diagrams information, described herein are intended only as illustrations of such devices and not as the specifications for such devices. ROHM CO.,LTD. disclaims any warranty that any use of such devices shall be free from infringement of any third party's intellectual property rights or other proprietary rights, and further, assumes no liability of whatsoever nature in the event of any such infringement, or arising from or connected with or related to the use of such devices.
- Upon the sale of any such devices, other than for buyer's right to use such devices itself, resell or otherwise dispose of the same, no express or implied right or license to practice or commercially exploit any intellectual property rights or other proprietary rights owned or controlled by
- ROHM CO., LTD. is granted to any such buyer.
- Products listed in this document are no antiradiation design.

The products listed in this document are designed to be used with ordinary electronic equipment or devices (such as audio visual equipment, office-automation equipment, communications devices, electrical appliances and electronic toys).
Should you intend to use these products with equipment or devices which require an extremely high level of reliability and the malfunction of with would directly endanger human life (such as medical instruments, transportation equipment, aerospace machinery, nuclear-reactor controllers, fuel controllers and other safety devices), please be sure to consult with our sales representative in advance.

About Export Control Order in Japan

Products described herein are the objects of controlled goods in Annex 1 (Item 16) of Export Trade Control Order in Japan.
In case of export from Japan, please confirm if it applies to "objective" criteria or an "informed" (by MITI clause) on the basis of "catch all controls for Non-Proliferation of Weapons of Mass Destruction.

Thank you for your accessing to ROHM product informations.

More detail product informations and catalogs are available,

please contact your nearest sales office.

Please contact our sales offices for details ;

U.S.A / San Diego	TEL : +1(858)625-3630	FAX : +1(858)625-3670
Atlanta	TEL : +1(770)754-5972	FAX : +1(770)754-0691
Dallas	TEL : +1(972)312-8818	FAX : +1(972)312-0330
Germany / Dusseldorf	TEL : +49(2154)9210	FAX : +49(2154)921400
United Kingdom / London	TEL : +44(1)908-282-666	FAX : +44(1)908-282-528
France / Paris	TEL : +33(0)1 56 97 30 60	FAX : +33(0) 1 56 97 30 80
China / Hong Kong	TEL : +852(2)740-6262	FAX : +852(2)375-8971
Shanghai	TEL : +86(21)6279-2727	FAX : +86(21)6247-2066
Dilian	TEL : +86(411)8230-8549	FAX : +86(411)8230-8537
Beijing	TEL : +86(10)8525-2483	FAX : +86(10)8525-2489
Taiwan / Taipei	TEL : +866(2)2500-6956	FAX : +866(2)2503-2869
Korea / Seoul	TEL : +82(2)8182-700	FAX : +82(2)8182-715
Singapore	TEL : +65-6332-2322	FAX : +65-6332-5662
Malaysia / Kuala Lumpur	TEL : +60(3)7958-8355	FAX : +60(3)7958-8377
Philippines / Manila	TEL : +63(2)807-6872	FAX : +63(2)809-1422
Thailand / Bangkok	TEL : +66(2)254-4890	FAX : +66(2)256-6334

Japan /
(Internal Sales)

Tokyo 2-1-1, Yaesu, Chuo-ku, Tokyo 104-0082
TEL : +81(3)5203-0321 FAX : +81(3)5203-0300

Yokohama 2-4-8, Shin Yokohama, Kohoku-ku, Yokohama, Kanagawa 222-8575
TEL : +81(45)476-2131 FAX : +81(45)476-2128

Nagoya Dainagayo Building 9F 3-28-12, Meieki, Nakamura-ku, Nagoya,Aichi 450-0002
TEL : +81(52)581-8521 FAX : +81(52)561-2173

Kyoto 579-32 Higashi Shiokouji-cho, Karasuma Nishi-iru, Shiokoujidori, Shimogyo-ku, Kyoto 600-8216
TEL : +81(75)311-2121 FAX : +81(75)314-6559

(Contact address for overseas customers in Japan)

Yokohama TEL : +81(45)476-9270 FAX : +81(045)476-9271

As of 18th. April 2005