1 Channel Compact High Side Switch ICs

1ch Adjustable Current Limit High Side Switch ICs

BD2244G-M BD2245G-M

General Description

BD2244G-M and BD2245G-M are low on-resistance N-channel MOSFET high-side power switches, optimized for Universal Serial Bus (USB) applications. BD2244G-M and BD2245G-M are equipped with the function of over-current detection, thermal shutdown, under-voltage lockout and soft-start. Moreover, the range of Current limit threshold can be adjusted from 0.2A to 1.7A by changing the external resistance

Features

- AEC-Q100 Qualified
- Adjustable Current Limit Threshold: 200mA to 1.7A
- Built-in Low On-Resistance (Typ 100mΩ) N-channel MOSFET Built-in
- Soft-Start Circuit
- Output Discharge Function
- Open-Drain Fault Flag Output
- Thermal Shutdown
- Under-Voltage Lockout
- Reverse Current Protection when Power Switch Off
- Control Input Logic
  - Active-High: BD2244G-M
  - Active-Low: BD2245G-M

Applications

Car accessory

Key Specifications

- Input Voltage Range: 2.8V to 5.5V
- On Resistance: (IN=5V) 100mΩ(Typ)
- Current Limit Threshold: 0.2A to 1.7A adjustable
- Standby Current: 0.01μA (Typ)
- Operating Temperature Range: -40°C to +85°C

Package

W(Typ) x D(Typ) x H(Max)

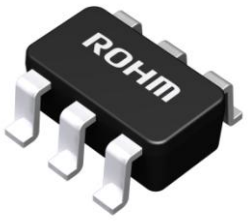

SSOP6
2.90mm x 2.80mm x 1.25mm

Typical Application Circuit

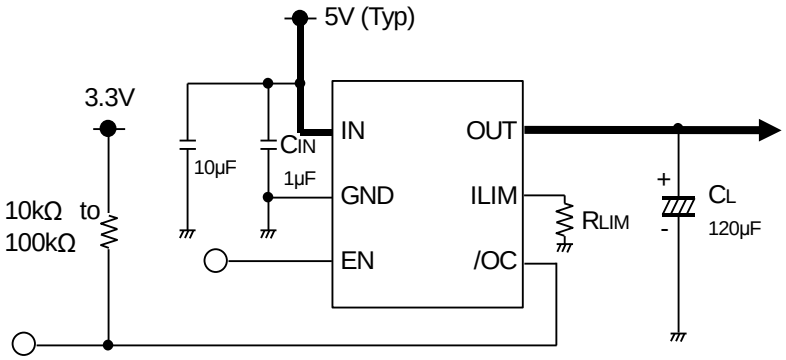

Figure 1. Typical Application Circuit

Lineup

Output Load Current Max	Adjustable Current Limit Threshold	Channel	Control input logic	Package		Orderable Part Number
1.5A	200mA to 1.7A	1ch	High	SSOP6	Reel of 3000	BD2244G – MGTR
1.5A	200mA to 1.7A	1ch	Low	SSOP6	Reel of 3000	BD2245G – MGTR

○Product structure : Silicon monolithic integrated circuit ○This product has no designed protection against radioactive rays

© 2014 ROHM Co., Ltd. All rights reserved.

Block Diagram

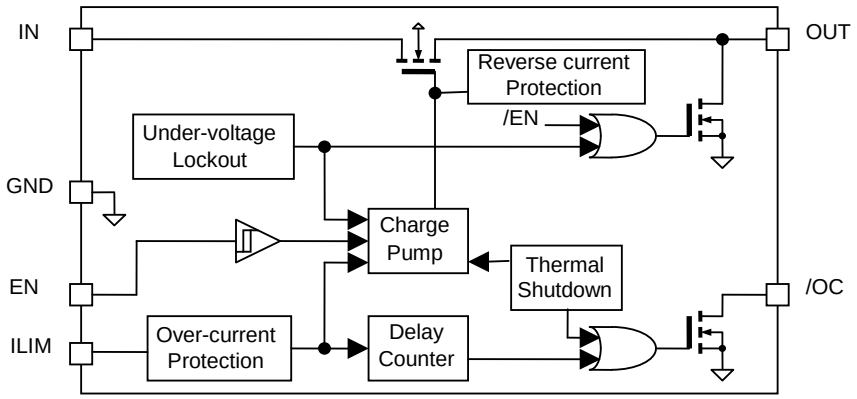

Figure 2. Block Diagram

Pin Configuration

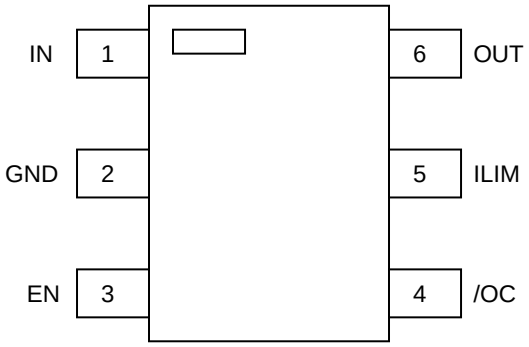

Figure 3. Pin Configuration (TOP VIEW)

Pin Descriptions

Pin No.	Symbol	I/O	Function
1	IN	I	Switch input and the supply voltage for the IC.
2	GND	-	Ground.
3	EN	I	Enable input. High-level input turns on the switch (BD2244G-M) Low-level input turns on the switch (BD2245G-M)
4	/OC	O	Over-current detection terminal. Low level output during over-current or over-temperature condition. Open-drain fault flag output.
5	ILIM	O	Current limit threshold set Pin. External resistor used to set Current limit threshold. Recommended 11.97 kΩ ≤ R_{LIM} ≤ 106.3 kΩ
6	OUT	O	Power switch output.

© 2014 ROHM Co., Ltd. All rights reserved.

Absolute Maximum Ratings (Ta=25°C)

Parameter	Symbol	Rating	Unit
IN Supply Voltage	V_{IN}	-0.3 to +7.0	V
EN Input Voltage	V_{EN}	-0.3 to +7.0	V
ILIM Voltage	V_{ILIM}	-0.3 to +7.0	V
ILIM Source Current	I_{ILIM}	1	mA
/OC Voltage	$V_{/OC}$	-0.3 to +7.0	V
/OC Sink Current	$I_{/OC}$	10	mA
OUT Voltage	V_{OUT}	-0.3 to +7.0	V
Storage Temperature	Tstg	-55 to +150	°C
Power Dissipation	Pd	0.67(Note1)	W

(Note 1) Mounted on 70mm x 70mm x 1.6mm glass epoxy board. Reduce 5.4mW per 1℃ above 25℃

Caution: Operating the IC over the absolute maximum ratings may damage the IC. In addition, it is impossible to predict all destructive situations such as short-circuit modes, open circuit modes, etc. Therefore, it is important to consider circuit protection measures, like adding a fuse, in case the IC is operated in a special mode exceeding the absolute maximum ratings.

Recommended Operating Conditions

Parameter	Symbol	Rating			Unit
		Min	Typ	Max	
IN Operating Voltage	V_{IN}	2.8	5.0	5.5	V
Operating Temperature	Topr	-40	-	+85	°C

Electrical Characteristics (V_{IN} = 5V, R_{LIM} =20kΩ, Ta = 25°C, unless otherwise specified.)

DC Characteristics

Parameter	Symbol	Limit			Unit	Conditions
		Min	Typ	Max		
Operating Current	I_{DD}	-	120	168	μA	V_{EN} = 5V, V_{OUT} = open, (BD2244G-M) V_{EN} = 0V, V_{OUT} = open, (BD2245G-M)
Standby Current	I_{STB}	-	0.01	5	μA	V_{EN} = 0V, V_{OUT} = open, (BD2244G-M) V_{EN} = 5V, V_{OUT} = open, (BD2245G-M)
EN Input Voltage	V_{ENH}	2.0	-	-	V	High input
	V_{ENL}	-	-	0.8	V	Low input
EN Input Leakage	I_{EN}	-1	0.01	1	μA	V_{EN} = 0V or 5V
On-Resistance	R_{ON}	-	100	130	mΩ	I_{OUT} = 500mA
Reverse Leak Current	I_{REV}	-	-	1	μA	V_{OUT} = 5V, V_{IN} = 0V
Current Limit Threshold	I_{TH}	112	212	313	mA	R_{LIM} = 100kΩ
		911	1028	1145		R_{LIM} = 20kΩ
		1566	1696	1826		R_{LIM} = 12kΩ
Output Discharge Resistance	R_{DISC}	30	60	120	Ω	I_{OUT} = -1mA, V_{EN} = 0V (BD2244G-M) I_{OUT} = -1mA, V_{EN} = 5V (BD2245G-M)
/OC Output Low Voltage	$V_{/OC}$	-	-	0.4	V	$I_{/OC}$ = -1mA
UVLO Threshold	V_{TUVH}	2.35	2.55	2.75	V	V_{IN} increasing
	V_{TUVL}	2.30	2.50	2.70	V	V_{IN} decreasing

AC Characteristics

Parameter	Symbol	Limits			Unit	Conditions
		Min	Typ	Max		
Output Rise Time	t_{ON1}	-	0.6	6	ms	R_L = 100Ω
Output Turn-On Time	t_{ON2}	-	1	10	ms	
Output Fall Time	t_{OFF1}	-	1.8	20	μs	
Output Turn-Off Time	t_{OFF2}	-	3.2	40	μs	
/OC Delay Time	$t_{/OC}$	4	7	12	ms	

© 2014 ROHM Co., Ltd. All rights reserved.

Measurement Circuit

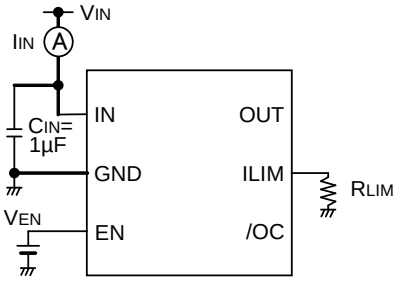

A. Operating Current, Standby Current

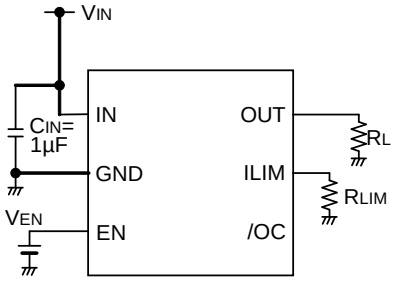

B. EN Input Voltage, Output Rise/Fall Time
Output Turn-On/ Turn-Off Time

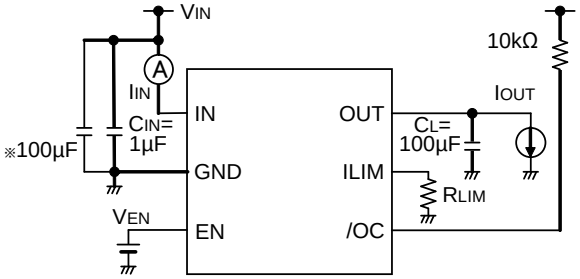

C. On-Resistance, Current Limit Threshold, /OC Delay Time
※Use capacitance more than 100µF at output short circuit test by using external power supply.

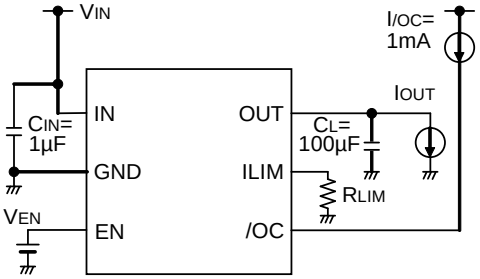

D. /OC Output Low Voltage

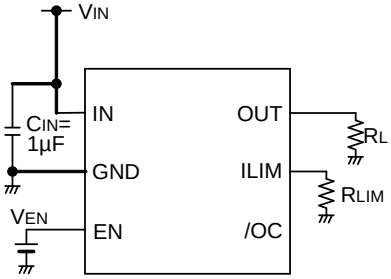

E. UVLO Threshold

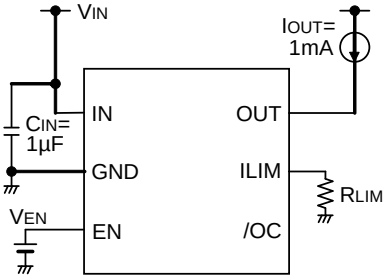

F. Output Discharge Resistance

Figure 4. Measurement Circuit

Timing Diagram

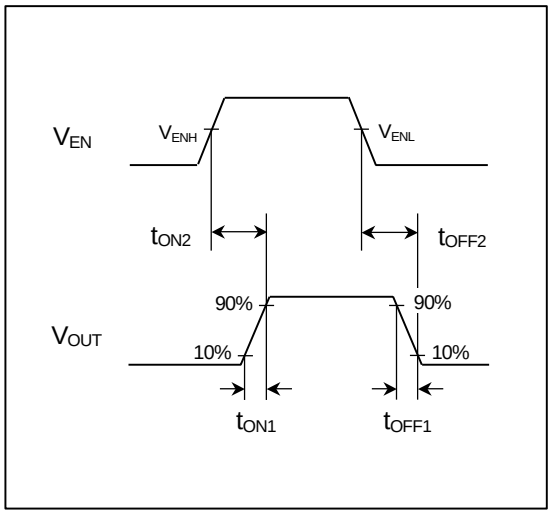

Figure 5. Output Rise/Fall Time
(BD2244G-M)

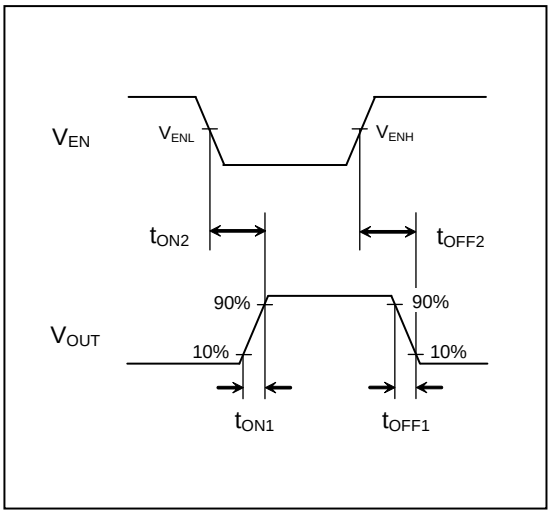

Figure 6. Output Rise/Fall Time
(BD2245G-M)

© 2014 ROHM Co., Ltd. All rights reserved.

Typical Performance Curves

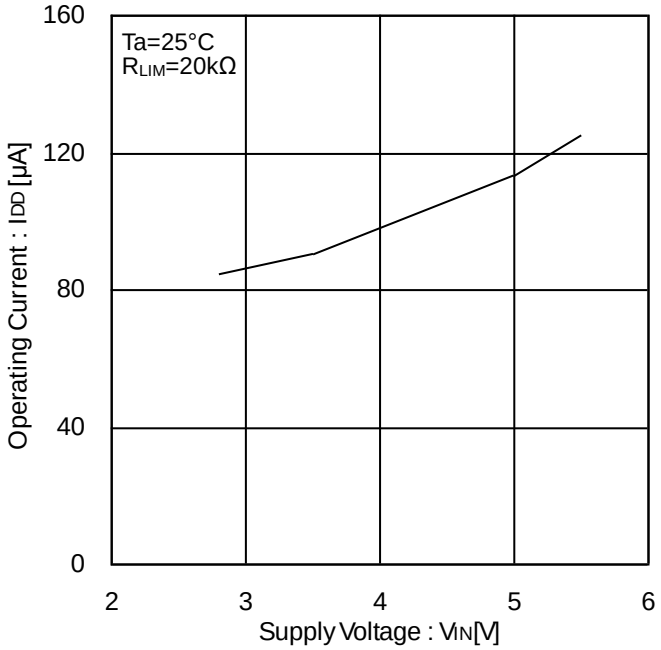

Figure 7. Operating Current vs Supply Voltage
(EN Enable)

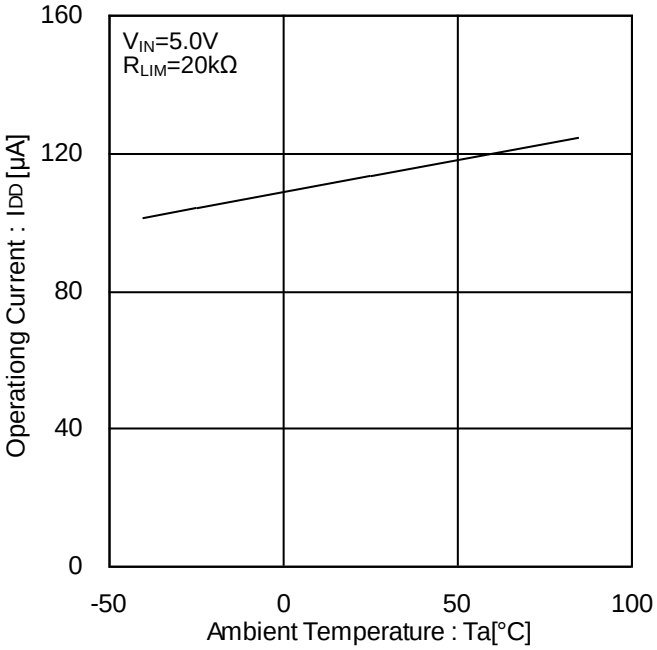

Figure 8. Operating Current vs Ambient Temperature
(EN Enable)

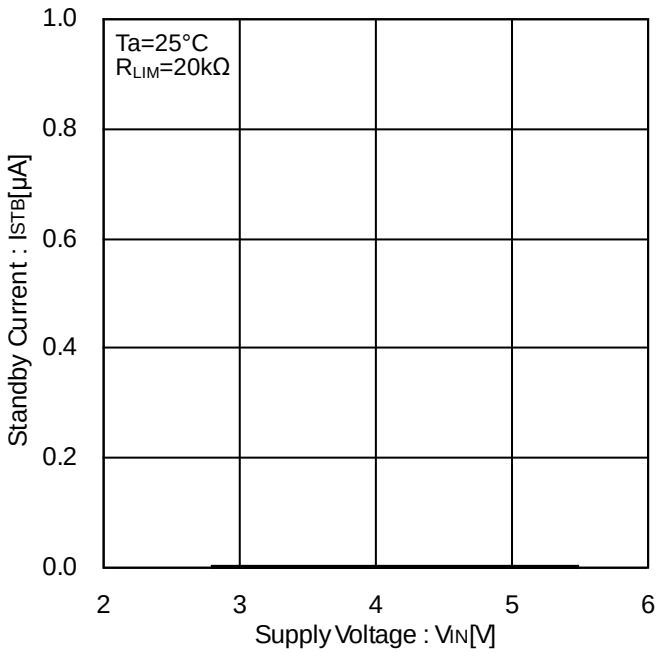

Figure 9. Standby Current vs Supply Voltage
(EN Disable)

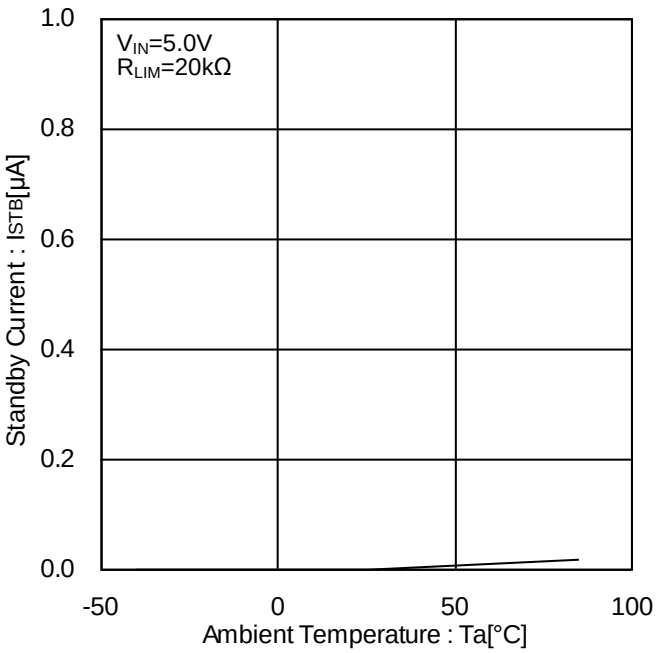

Figure 10. Standby Current vs Ambient Temperature
(EN Disable)

© 2014 ROHM Co., Ltd. All rights reserved.

Typical Performance Curves - continued

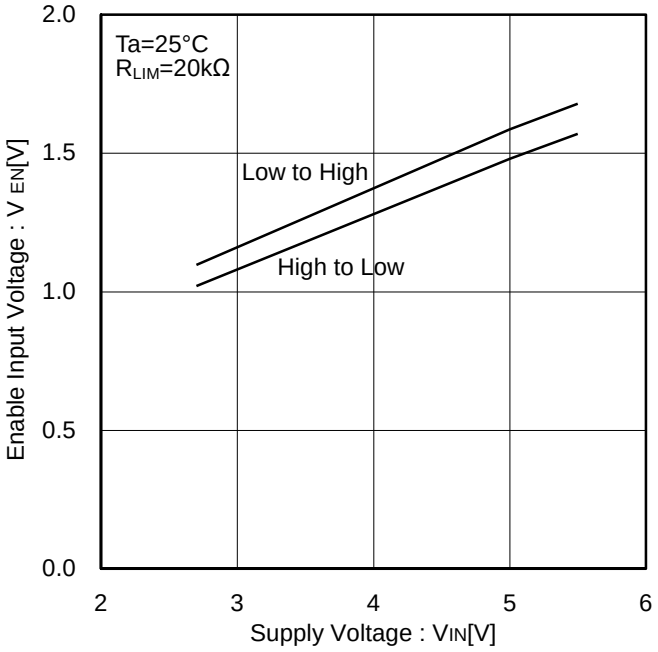

Figure 11. EN Input Voltage vs Supply Voltage

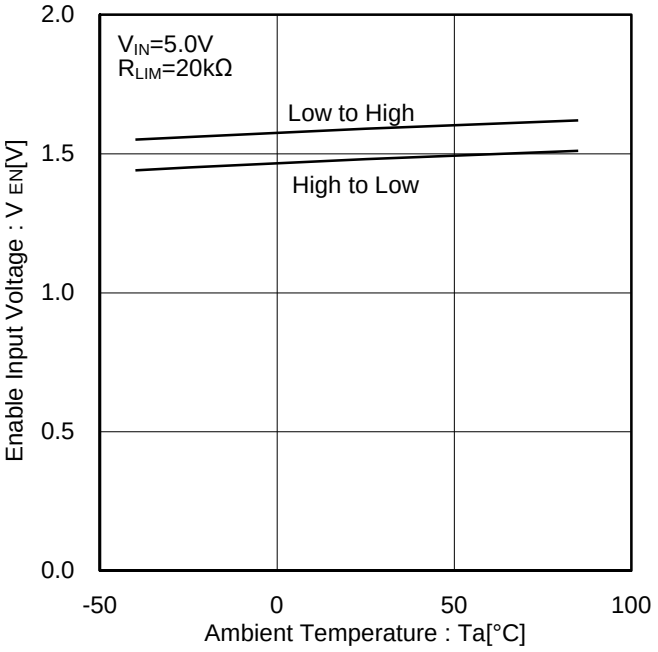

Figure 12. EN Input Voltage vs Ambient Temperature

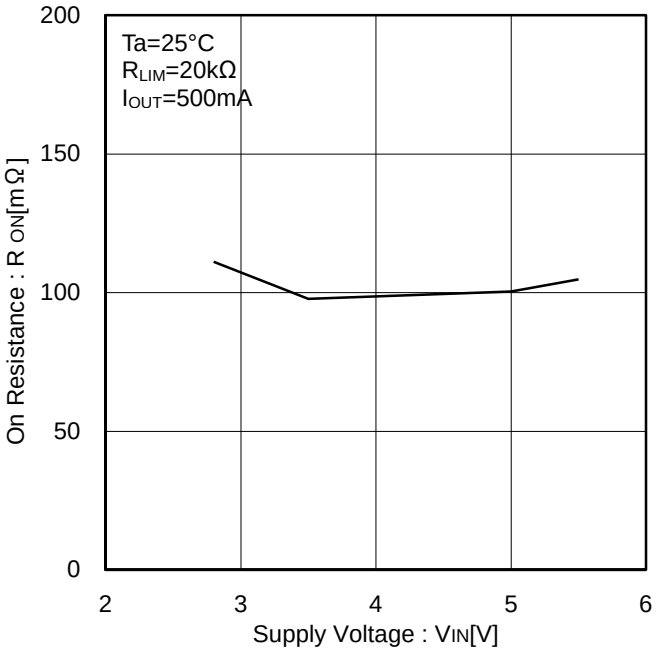

Figure 13. On-Resistance vs Supply Voltage

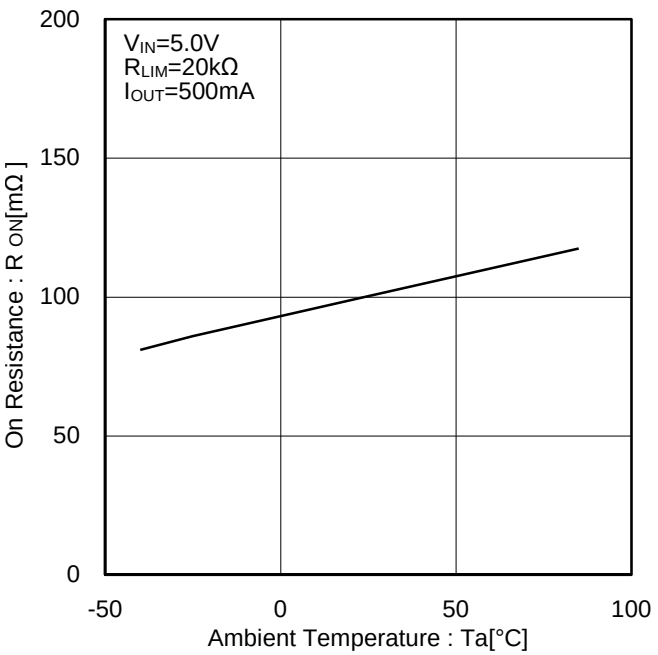

Figure 14. On-Resistance vs Ambient Temperature

© 2014 ROHM Co., Ltd. All rights reserved.

Typical Performance Curves - continued

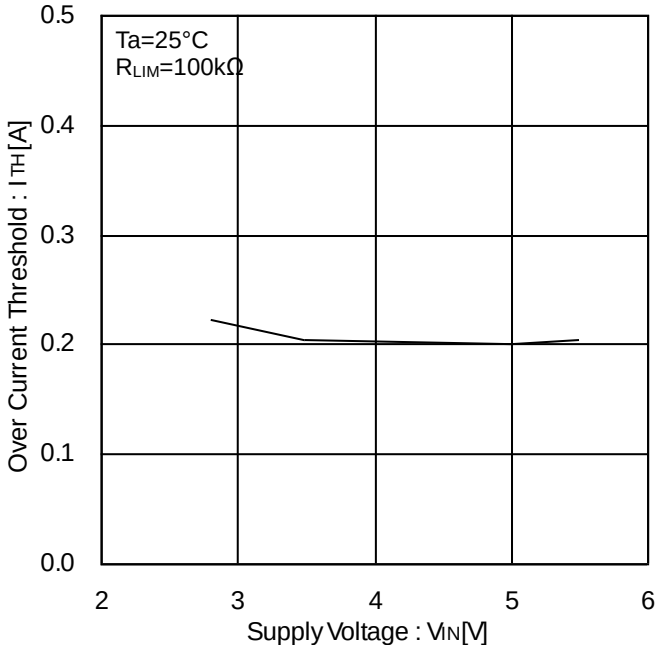

Figure 15. Over-Current Threshold 1 vs Supply Voltage

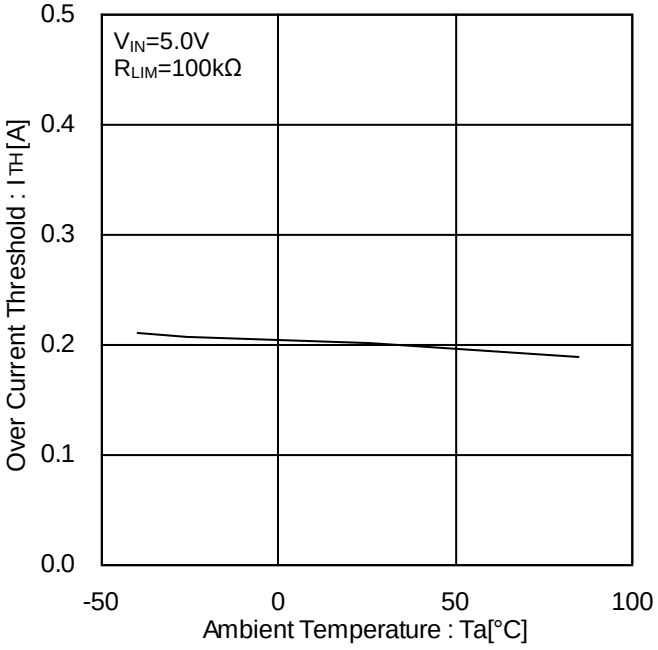

Figure 16. Over-Current Threshold 1 vs Ambient Temperature

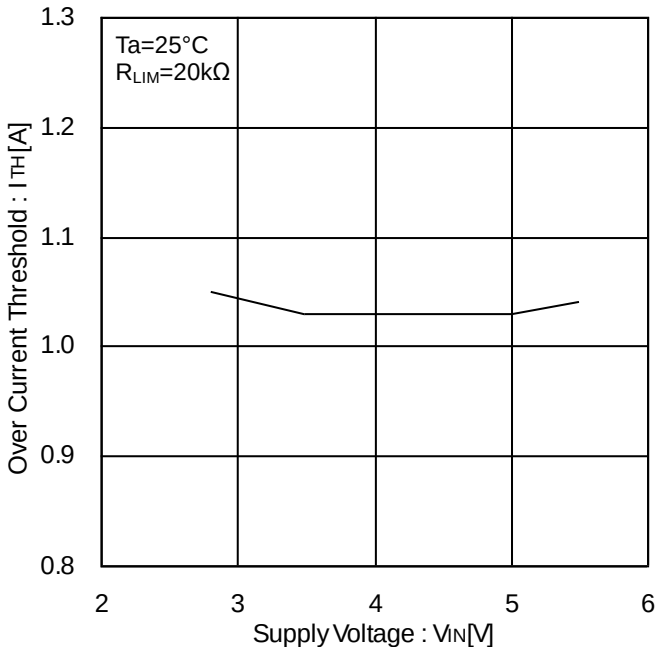

Figure 17. Over-Current Threshold 2 vs Supply Voltage

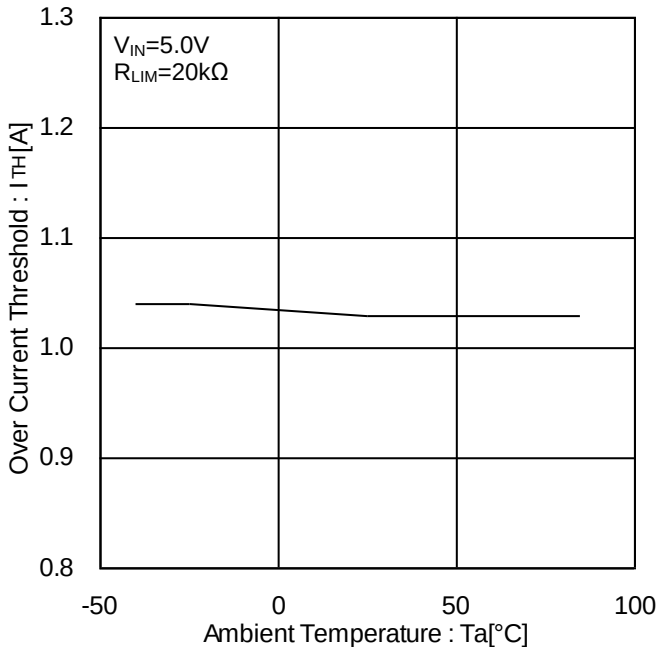

Figure 18. Over-Current Threshold 2 vs Ambient Temperature

© 2014 ROHM Co., Ltd. All rights reserved.

Typical Performance Curves - continued

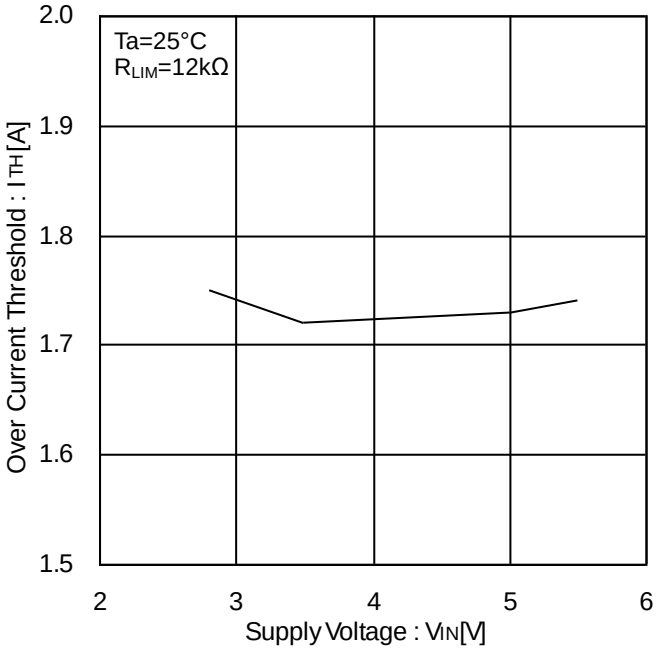

Figure 19. Over-Current Threshold 3 vs Supply Voltage

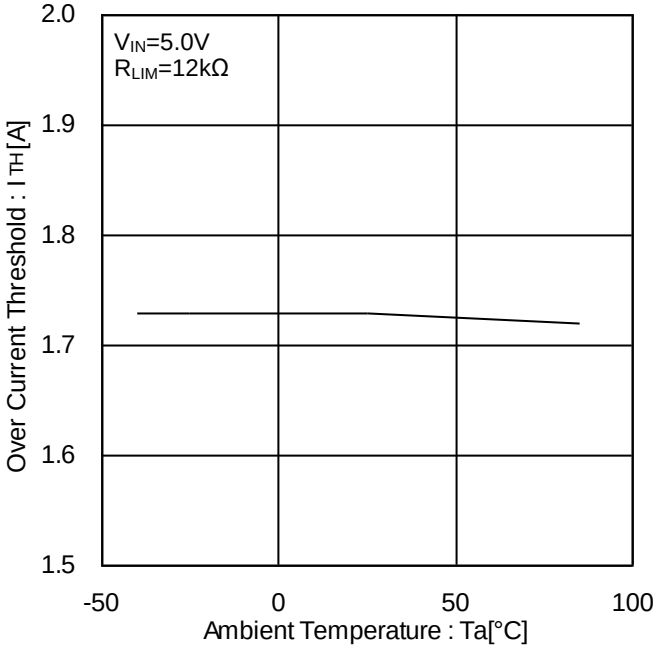

Figure 20. Over-Current Threshold 3 vs Ambient Temperature

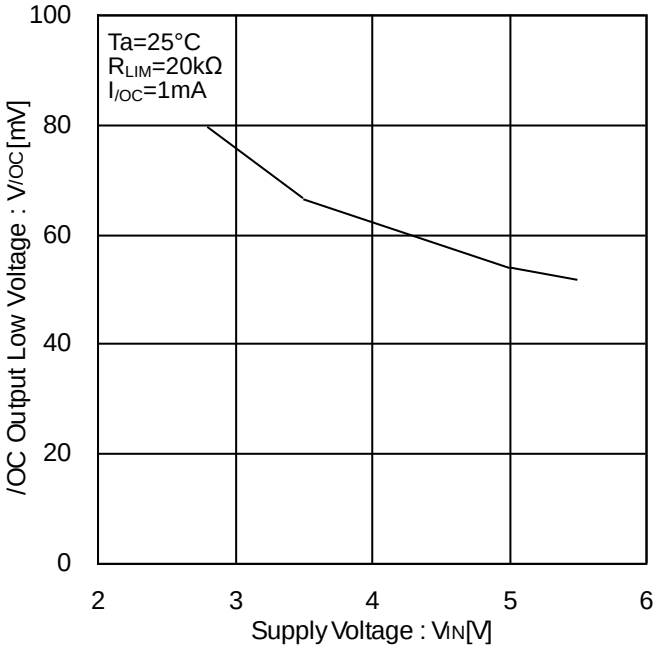

Figure 21. /OC Output Low Voltage vs Supply Voltage

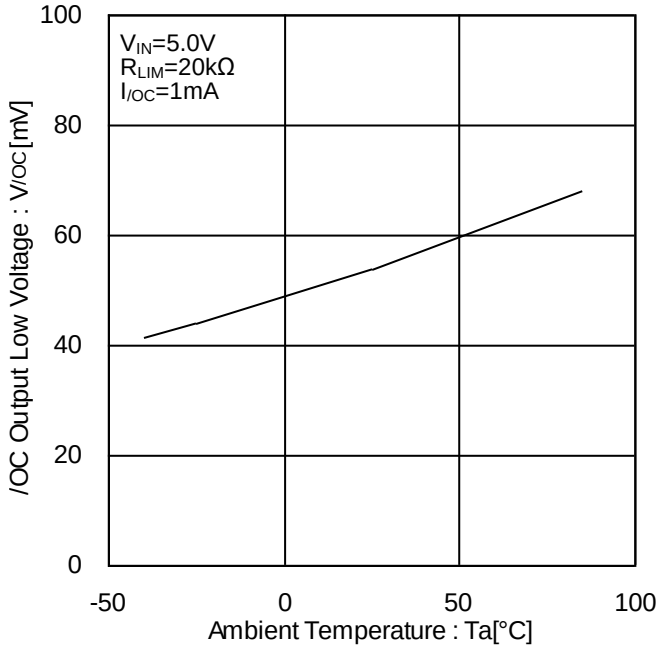

Figure 22. /OC Output Low Voltage vs Ambient Temperature

© 2014 ROHM Co., Ltd. All rights reserved.

Typical Performance Curves - continued

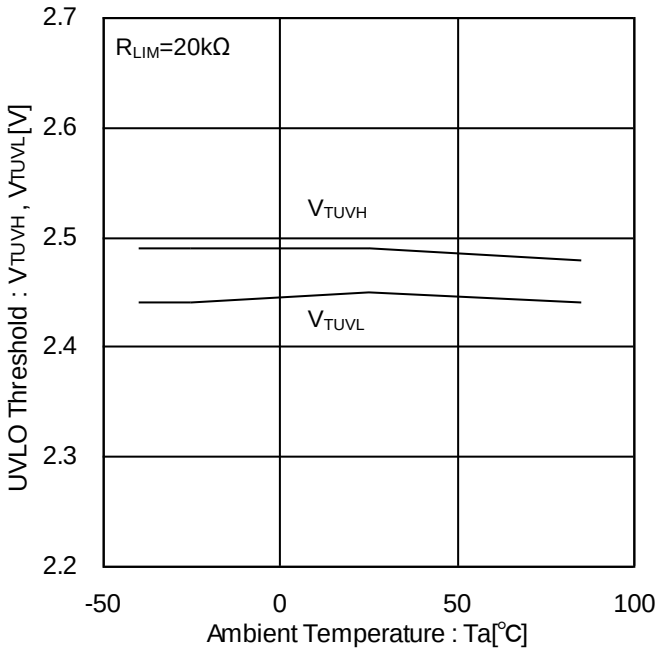

Figure 23. UVLO Threshold vs Ambient Temperature

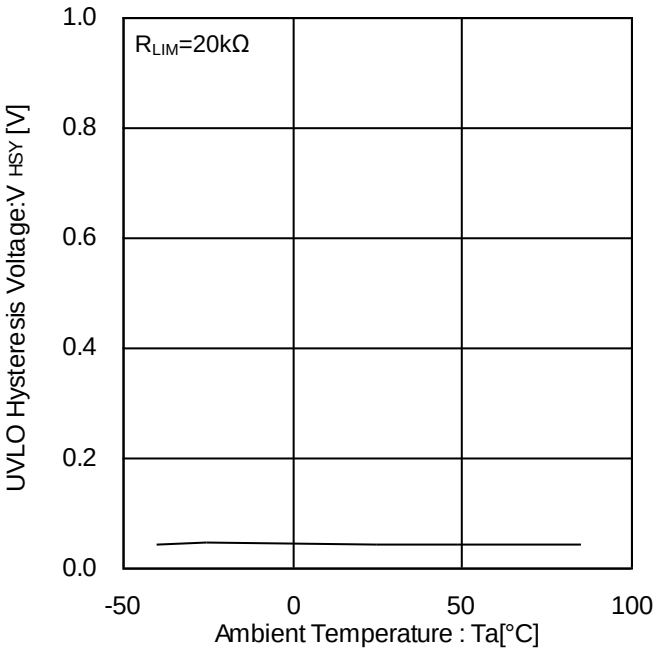

Figure 24. UVLO Hysteresis Voltage vs Ambient Temperature

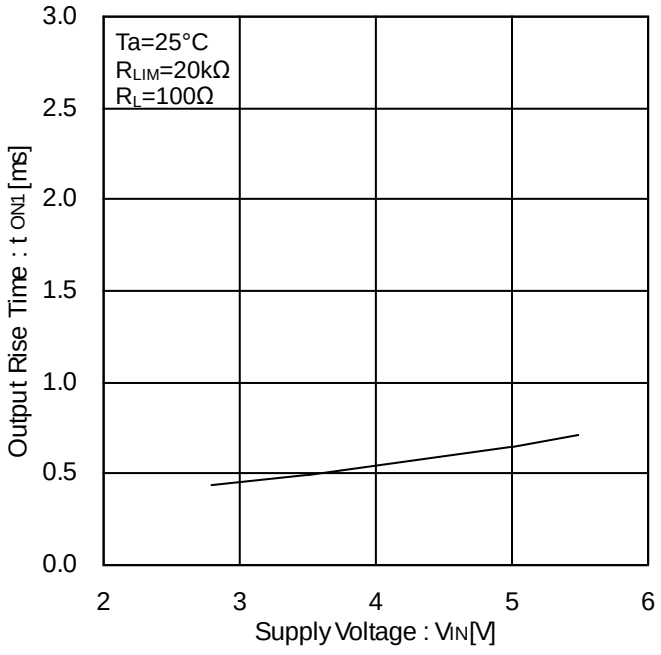

Figure 25. Output Rise Time vs Supply Voltage

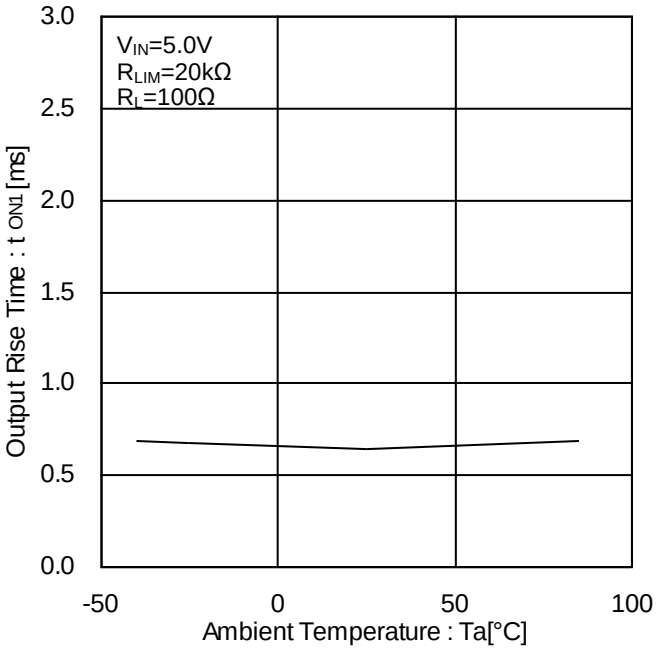

Figure 26. Output Rise Time vs Ambient Temperature

© 2014 ROHM Co., Ltd. All rights reserved.

Typical Performance Curves - continued

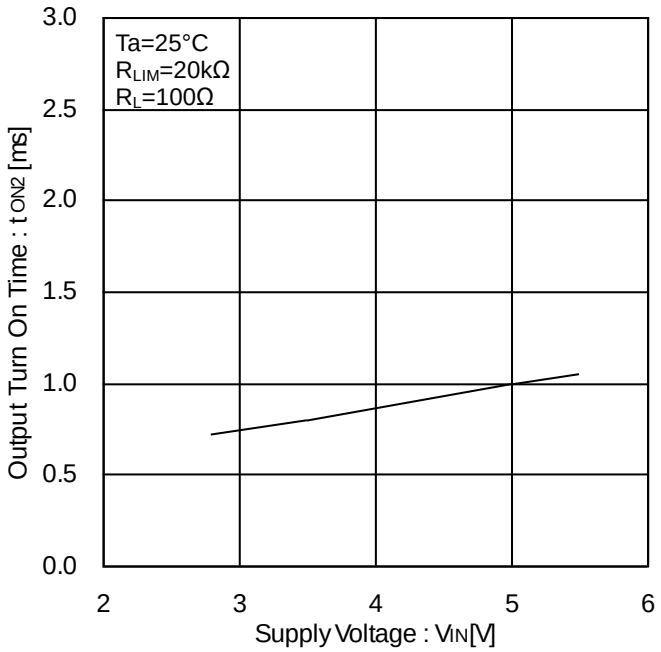

Figure 27. Output Turn-On Time vs Supply Voltage

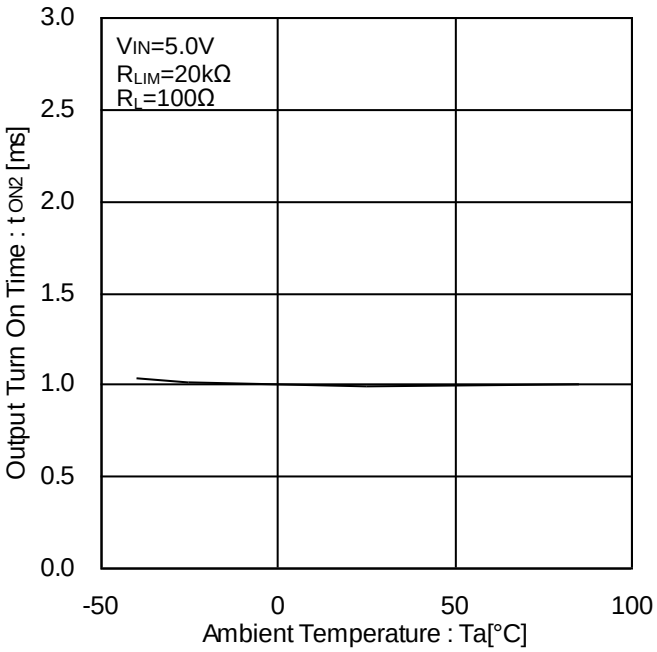

Figure 28. Output Turn-On Time vs Ambient Temperature

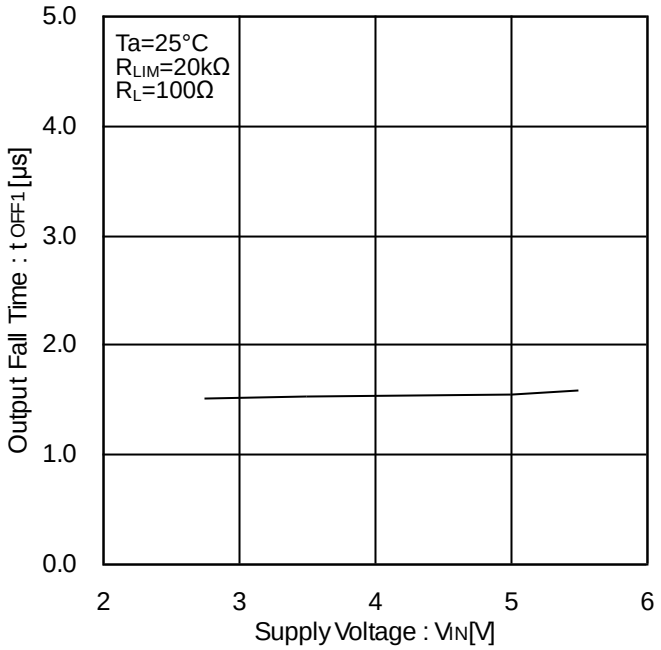

Figure 29. Output Fall Time vs Supply Voltage

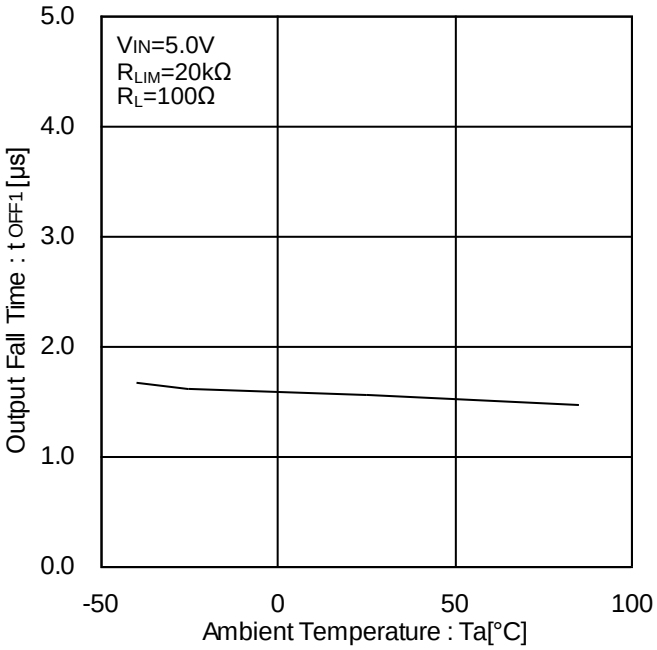

Figure 30. Output Fall Time vs Ambient Temperature

© 2014 ROHM Co., Ltd. All rights reserved.

Typical Performance Curves - continued

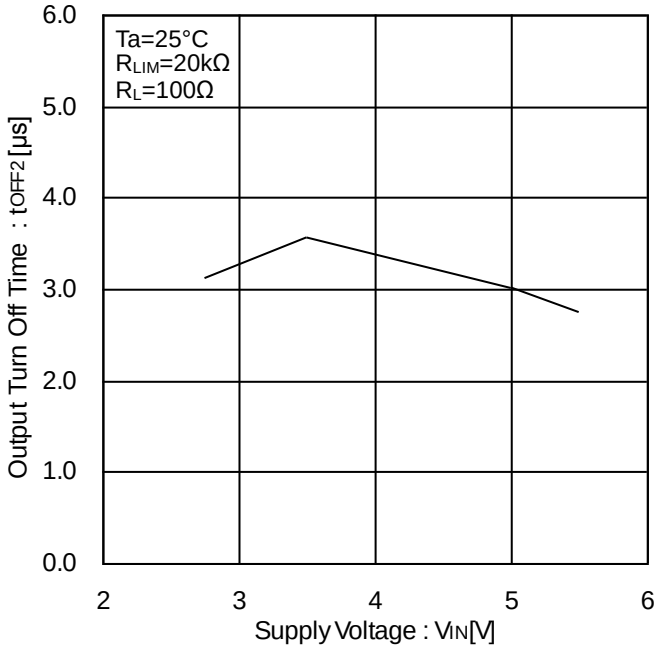

Figure 31. Output Turn-Off Time vs Supply Voltage

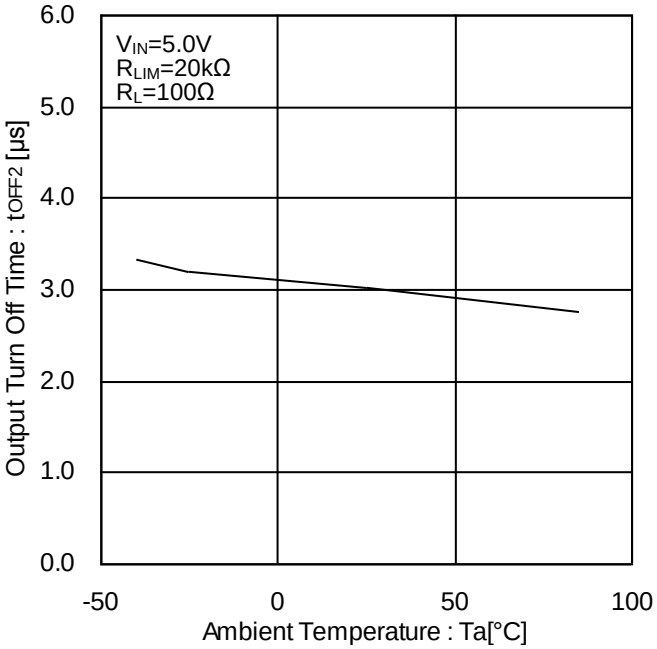

Figure 32. Output Turn-Off Time vs Ambient Temperature

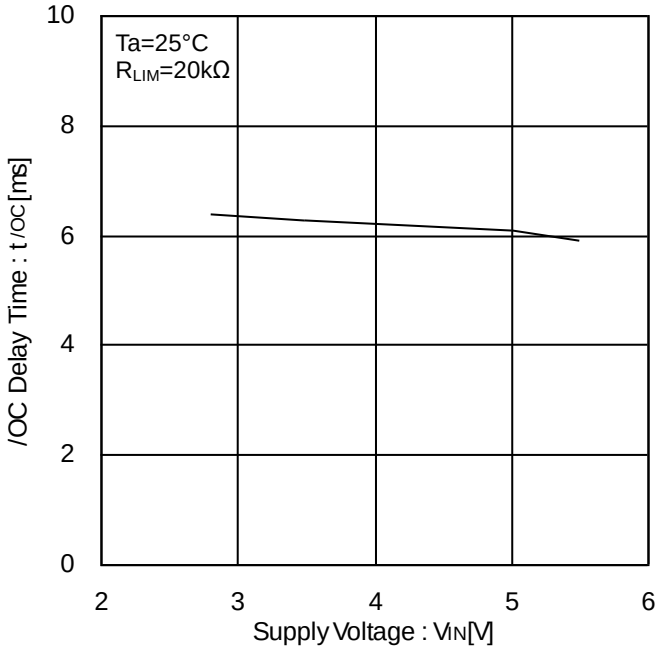

Figure 33. /OC Delay Time vs Supply Voltage

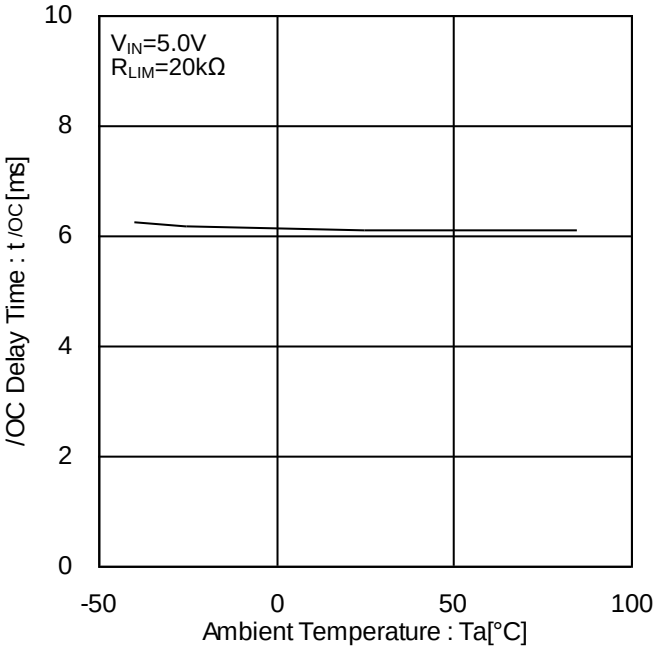

Figure 34. /OC Delay Time vs Ambient Temperature

© 2014 ROHM Co., Ltd. All rights reserved.

Typical Performance Curves - continued

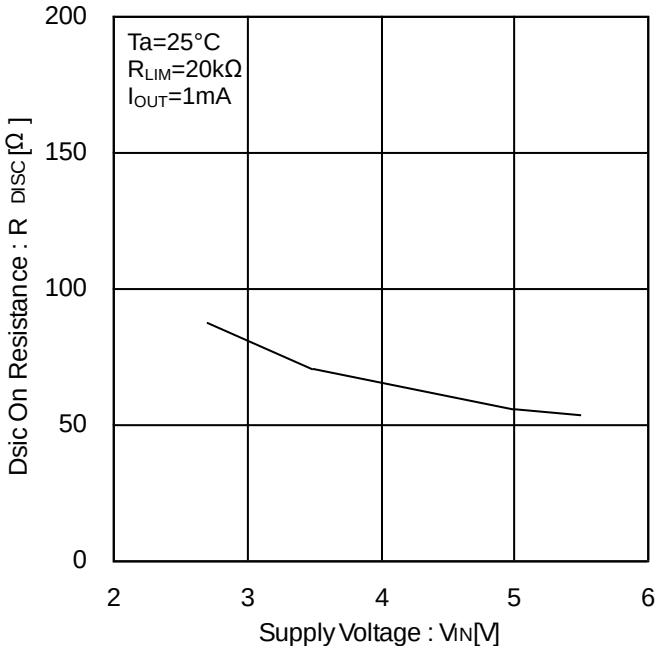

Figure 35. Discharge On Resistance vs Supply Voltage

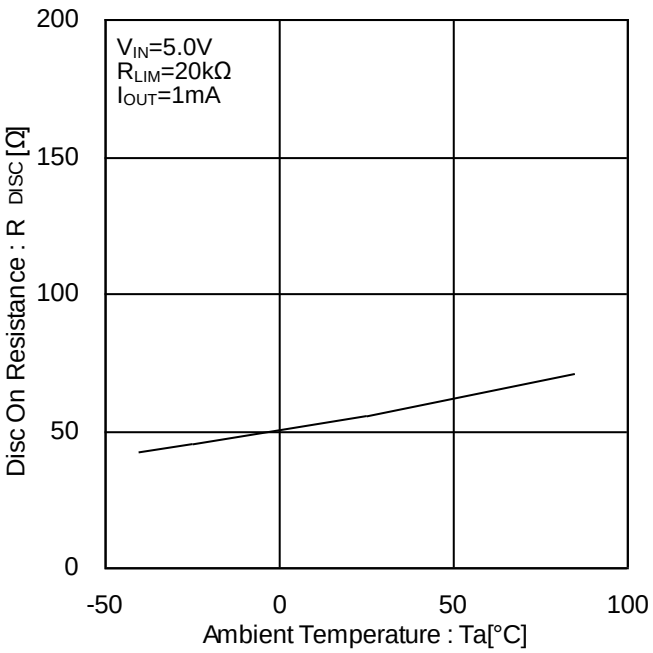

Figure 36. Discharge On Resistance vs Ambient Temperature

© 2014 ROHM Co., Ltd. All rights reserved.

Typical Wave Forms

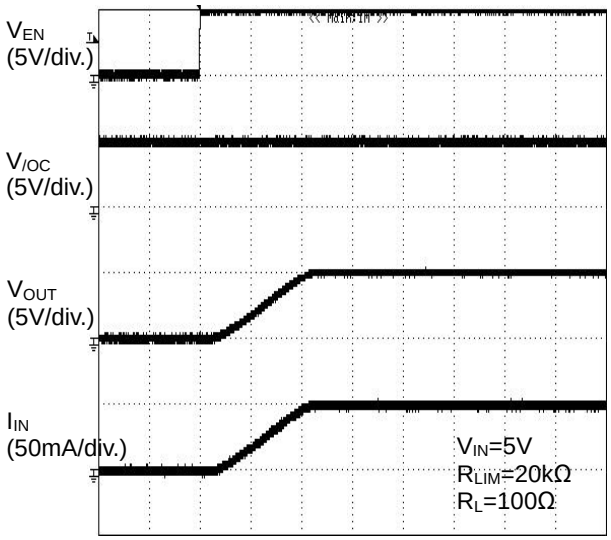

TIME (0.5ms/div.)
Figure 37. Output Rise Characteristic
(BD2244G-M)

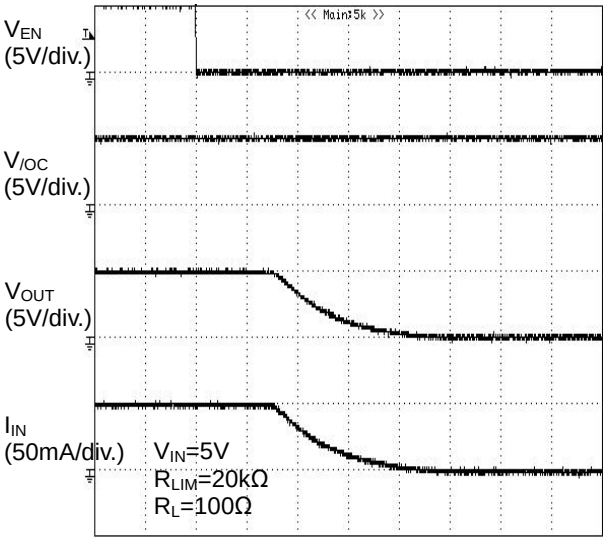

TIME (1µs/div.)
Figure 38. Output Fall Characteristic
(BD2244G-M)

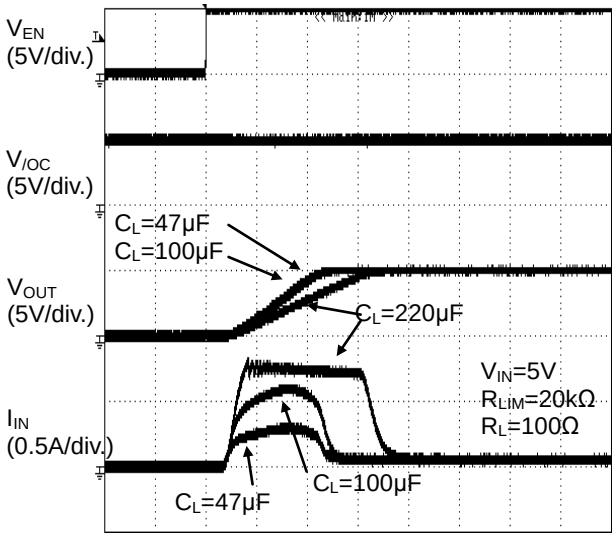

TIME (1ms/div.)
Figure 39. Inrush Current Response
(BD2244G-M)

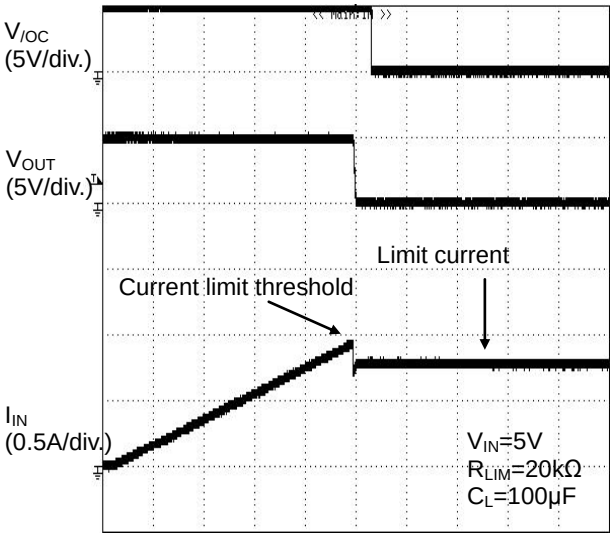

TIME (20ms/div.)
Figure 40. Over Current Response
Ramped Load

© 2014 ROHM Co., Ltd. All rights reserved.

Typical Wave Forms - continued

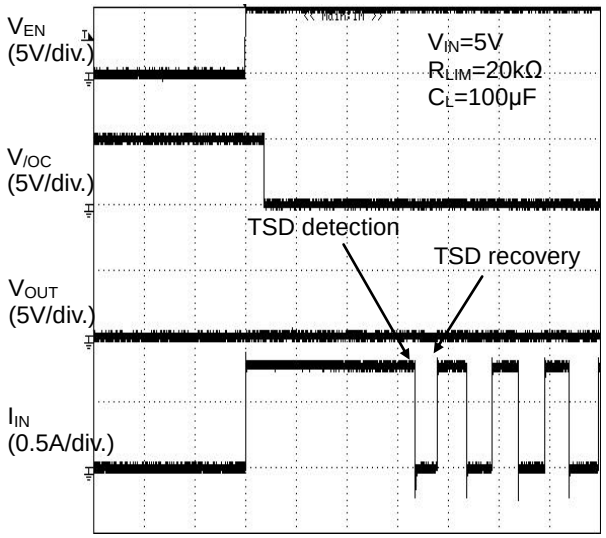

TIME (20ms/div.)
Figure 41. Over Current Response
Enable Into Short Circuit
(BD2244G-M)

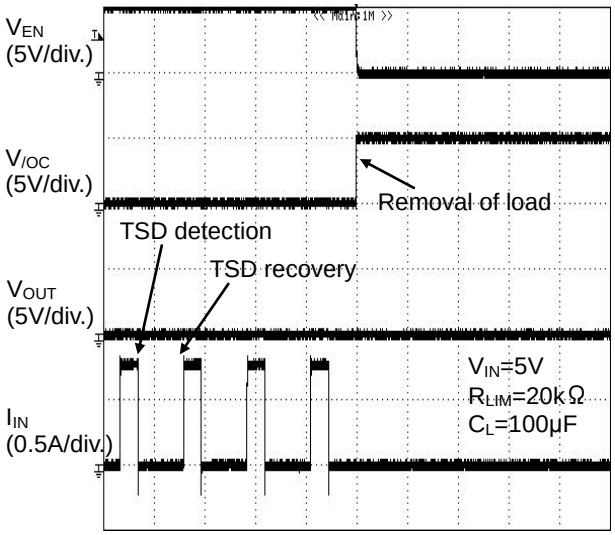

TIME (20ms/div.)
Figure 42. Over Current Response
Disenable From Short Circuit
(BD2244G-M)

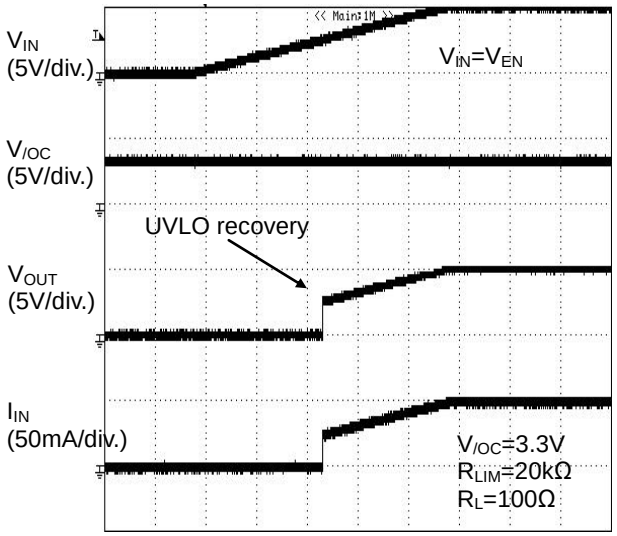

TIME (1s/div.)
Figure 43. UVLO Response
Increasing VIN (BD2244G-M)

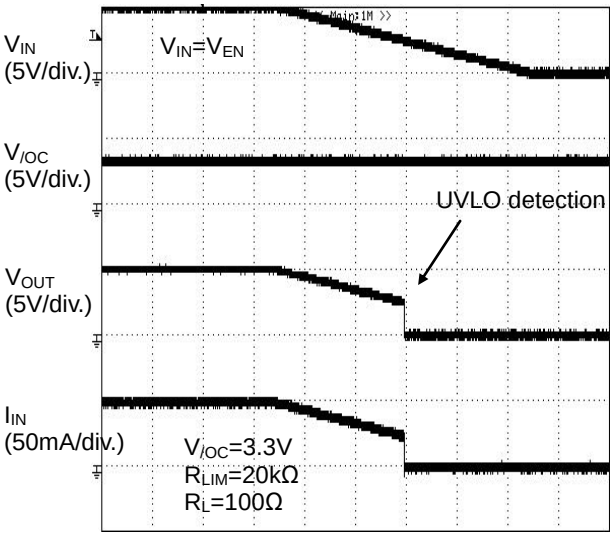

TIME (1s/div.)
Figure 44. UVLO Response
Decreasing VIN (BD2244G-M)

© 2014 ROHM Co., Ltd. All rights reserved.

Typical Wave Forms - continued

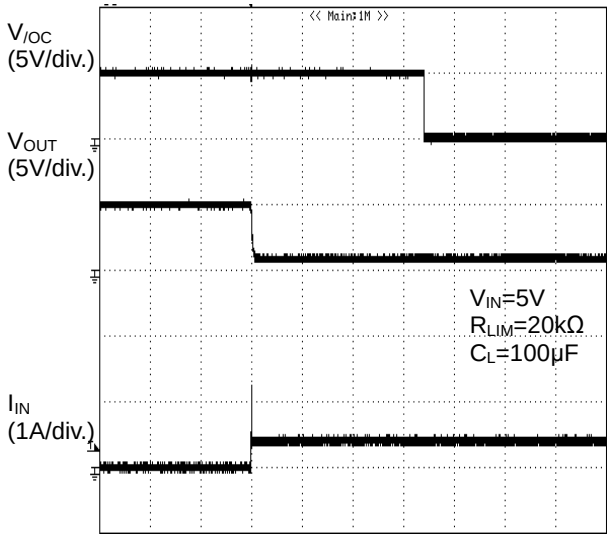

TIME (2ms/div.)
Figure 45. Over Current Response
1Ω Load Connected At Enable

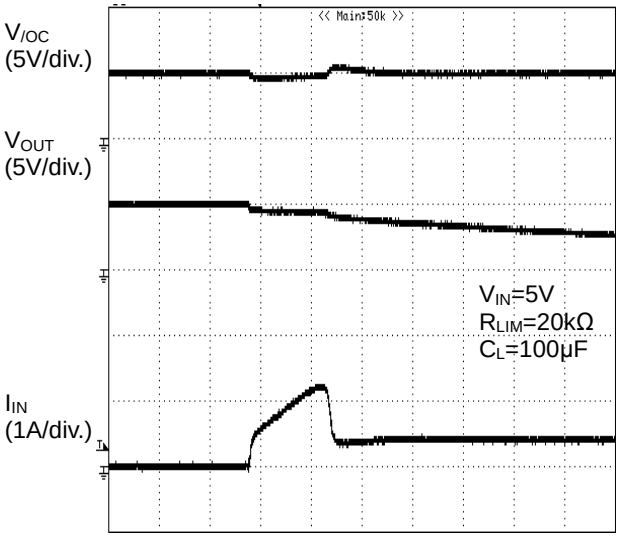

TIME (5μs/div.)
Figure 46. Over Current Response
1Ω Load Connected At Enable

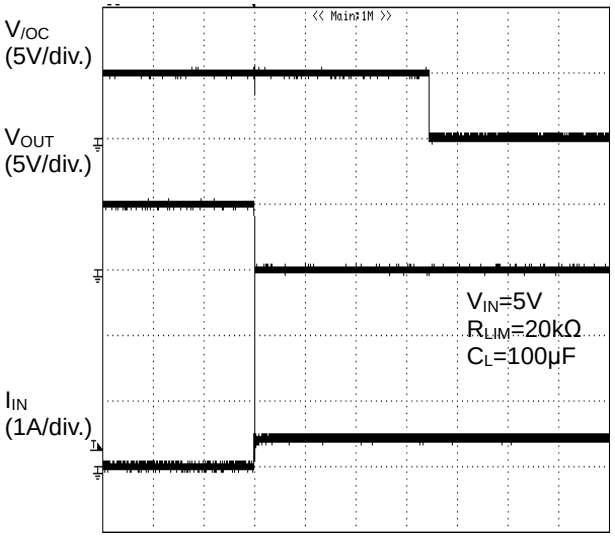

TIME (2ms/div.)
Figure 47. Over Current Response
0Ω Load Connected At Enable

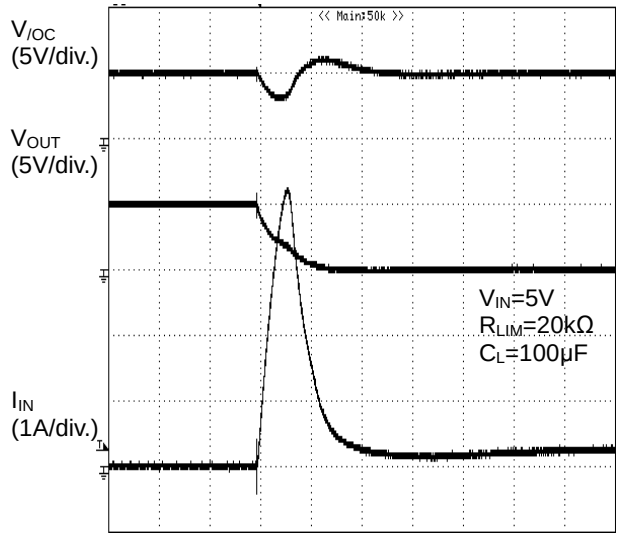

TIME (5μs/div.)
Figure 48. Over Current Response
0Ω Load Connected At Enable

© 2014 ROHM Co., Ltd. All rights reserved.

Application Circuit Example

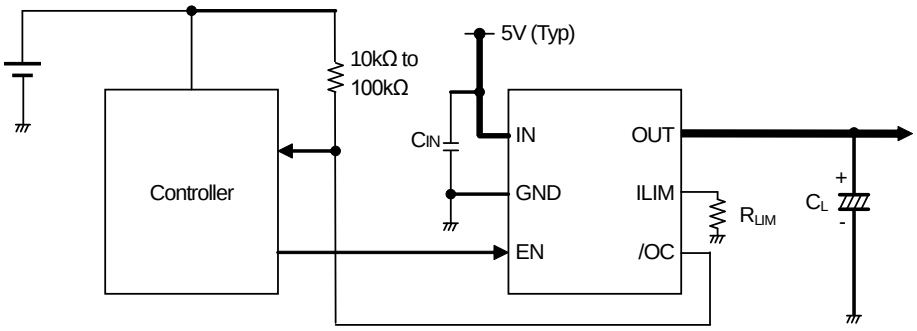

Figure 49. Application Circuit Example

Application Information

When excessive current flows due to output short-circuit or so, ringing occurs by inductance of power source line and IC. This may cause bad effects on IC operations. In order to avoid this case, a bypass capacitor (C_{IN}) should be connected across the IN terminal and GND terminal of IC. A 1µF or higher value is recommended. Moreover, in order to decrease voltage fluctuations of power source line and IC, connect a low ESR capacitor in parallel with $C_{IN.}$ A 10µF to 100µF or higher is effective.

Pull up /OC output by resistance 10kΩ to 100kΩ.

Set up values for C_L which satisfies the application.

This application circuit does not guarantee its operation.

When using the circuit with changes to the external circuit constants, make sure to leave an adequate margin for external components including AC/DC characteristics as well as the dispersion of the IC.

Functional Description

1. Switch Operation

IN terminal and OUT terminal are connected to the drain and the source of switch MOSFET respectively. The IN terminal is also used as power source input to internal control circuit.
When the switch is turned on from EN control input, the IN and OUT terminals are connected by a 100mΩ(Typ) switch. In ON status, the switch is bidirectional. Therefore, when the potential of OUT terminal is higher than that of the IN terminal, current flows from OUT terminal to IN terminal.
Since a parasitic diode between the drain and the source of switch MOSFET is canceled, current flow from OUT to IN is prevented during off state.

2. Thermal Shutdown Circuit (TSD)

If over-current would continue, the temperature of the IC would increase drastically. If the junction temperature goes beyond 120℃(Typ) in the condition of over-current detection, thermal shutdown circuit operates and turns power switch off, causing the IC to output a fault flag (/OC). Then, when the junction temperature decreases lower than 110℃(Typ), the power switch is turned on and fault flag (/OC) is cancelled. Also, regardless of over-current condition, if the junction temperature were beyond 160℃(Typ), thermal shutdown circuit makes power switch turn off and outputs fault flag (/OC). When junction temperature decreases lower than 140℃(Typ), power switch is turned on and fault flag (/OC) is cancelled. This operation repeats, unless the increase of chip's temperature is removed or the output of power switch is turned OFF. Fault flag (/OC) is output without delay time at thermal shutdown.
The thermal shutdown circuit operates when the switch is ON (EN signal is active).

3. Over-Current Detection (OCD)

The over-current detection circuit limits current (I_{SC}) and outputs error flag (/OC) when current flowing in each switch MOSFET exceeds a specified value. The over-current detection circuit works when the switch is on (EN signal is active). There are three types of response against over-current.

(1) When the switch is turned on while the output is in short circuit status, the switch gets into current limit status immediately. (See figure 41)

(2) When the output short-circuits or high capacity load is connected while the switch is on, very large current flows until the over-current limit circuit reacts. When the current detection and limit circuit operates, current limitation is carried out. (See figure 45)

© 2014 ROHM Co., Ltd. All rights reserved.

(3) When the output current increases gradually, current limitation would not operate unless the output current exceeds the over-current detection value. When it exceeds the detection value, current limitation is carried out. (See Figure 40)

4. Under-Voltage Lockout (UVLO)

UVLO circuit prevents the switch from turning on until the V_{IN} exceeds 2.55V(Typ). If the V_{IN} drops below 2.5V(Typ) while the switch turns on, then UVLO shuts off the power switch. UVLO has hysteresis of 50mV(Typ).
Under-voltage lockout circuit operates when the switch is on (EN signal is active). (see Figure 43, 44)

5. Fault Flag (/OC) Output

Fault flag output is an N-MOS open drain output. At detection of over-current or thermal shutdown, output is low-level. Over-current detection has delay filter. This delay filter prevents instantaneous current detection such as inrush current at switch on, hot plug from being informed to outside, but if charge up time for output capacitance is longer than delay time, fault flag output asserts low level. When output current is close to Current Limit Threshold value, fault flag output (/OC) might be low level before turning to over-current condition because it is affected by current swinging or noise. If fault flag output is unused, /OC pin should be connected to open or ground line.

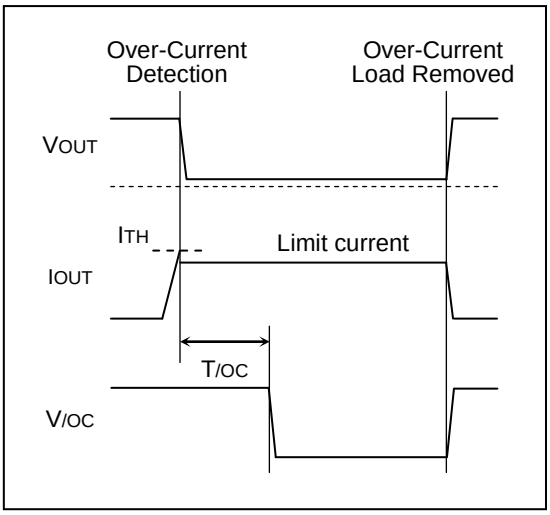

Figure 50. Over-Current Detection

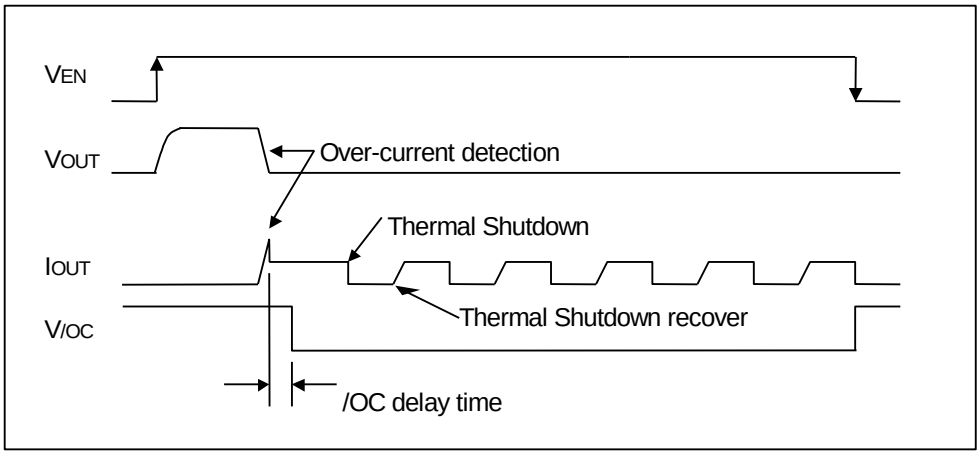

Figure 51. Over-Current Detection, Thermal Shutdown Timing (BD2244G-M)

© 2014 ROHM Co., Ltd. All rights reserved.

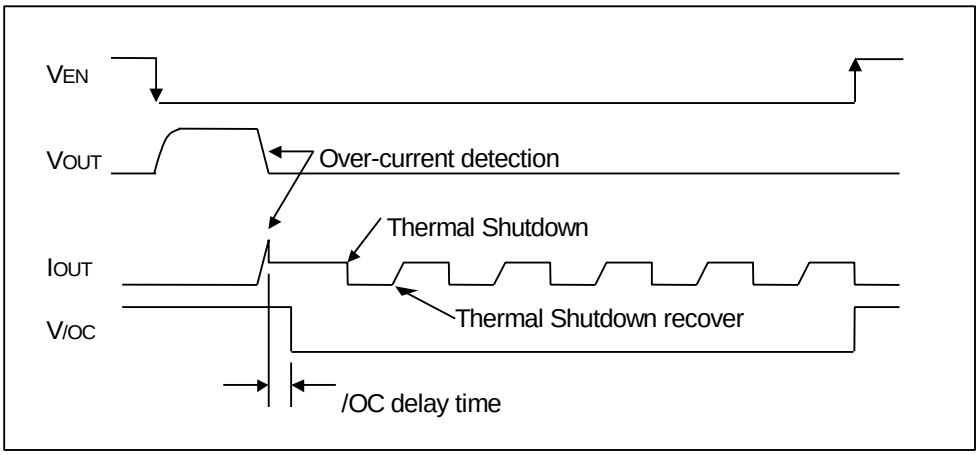

Figure 52. Over-Current Detection, Thermal Shutdown Timing (BD2245G-M)

6. Adjustable Current Limit Threshold

BD2244/45G-M is able to change over-current detection value from 200mA to 1.7A by connecting resistance (R_{LIM}) between ILIM pin and GND pin. The resistance value from 11.97KΩ to 106.3kΩ is recommended for R_{LIM}. The relational expression and the table for resistance value and over-current detection value are described below. Allocate R_{LIM} close to IC as possible. Be careful not to be affected by parasitic resistance of board pattern because over-current detection value is depended on the resistance value between ILIM pin and GND pin. ILIM pin cannot be used as open and short to GND pin. The R_{LIM} resistance tolerance directly affects the current limit threshold accuracy. Recommended to use low tolerance resistance.

Over Current Threshold Equation,

$$Ith(Typ)[mA] = 19364 \times R_{LIM}[k\Omega]^{-0.98}$$

$$Ith(Min)[mA] = Ith(Typ)[mA] \times 0.98 - 96$$

$$Ith(Max)[mA] = Ith(Typ)[mA] \times 1.02 + 96$$

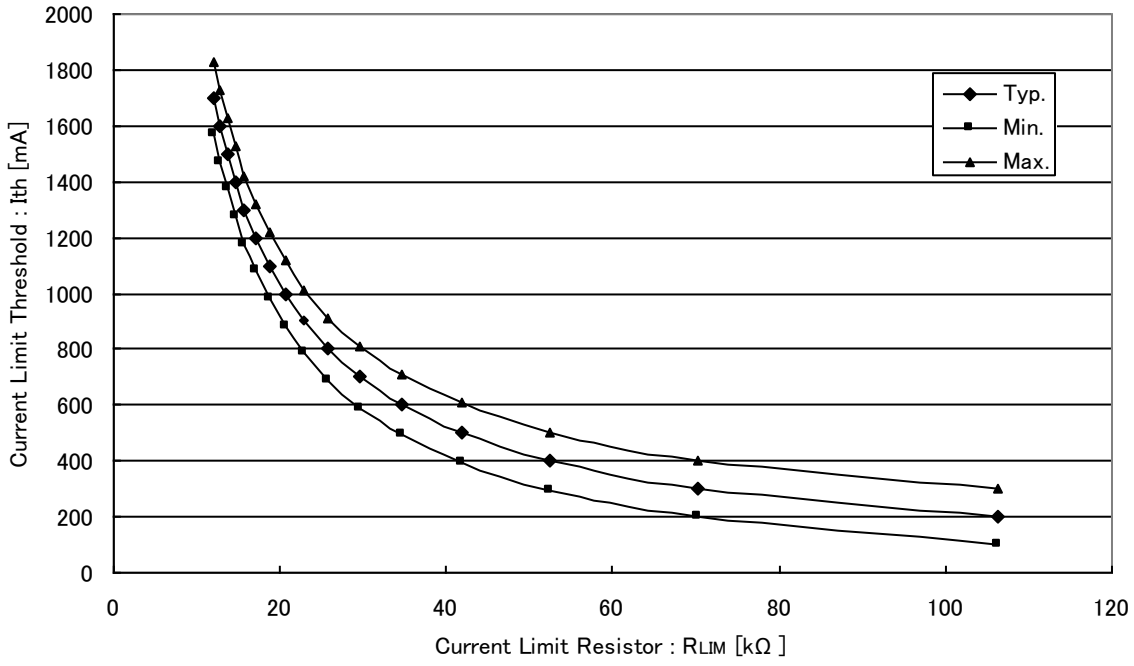

Figure 53. Ith vs. R_{LIM} graph

© 2014 ROHM Co., Ltd. All rights reserved.

R_{LIM} (kΩ)	Current Limit Threshold (mA)		
	MIN	TYP	MAX
106.30	100	200	300
70.28	198	300	402
52.40	296	400	504
41.73	394	500	606
34.65	492	600	708
29.60	590	700	810
25.83	688	800	912
22.91	786	900	1014
20.57	884	1000	1116
18.67	982	1100	1218
17.08	1080	1200	1320
15.74	1178	1300	1422
14.59	1276	1400	1524
13.60	1374	1500	1626
12.73	1472	1600	1728
11.97	1570	1700	1830

Table 1. Ith Tolerance vs. R_{LIM}

7. Output Discharge Function

When the switch is turned off from disable control input or UVLO function, the 60Ω(Typ) discharge circuit between OUT and GND turns on. By turning on this switch, electric charge at capacitive load is discharged. But when the voltage of IN declines extremely, then the OUT pin becomes Hi-Z without UVLO function.

© 2014 ROHM Co., Ltd. All rights reserved.

Power Dissipation

(SSOP6 package)

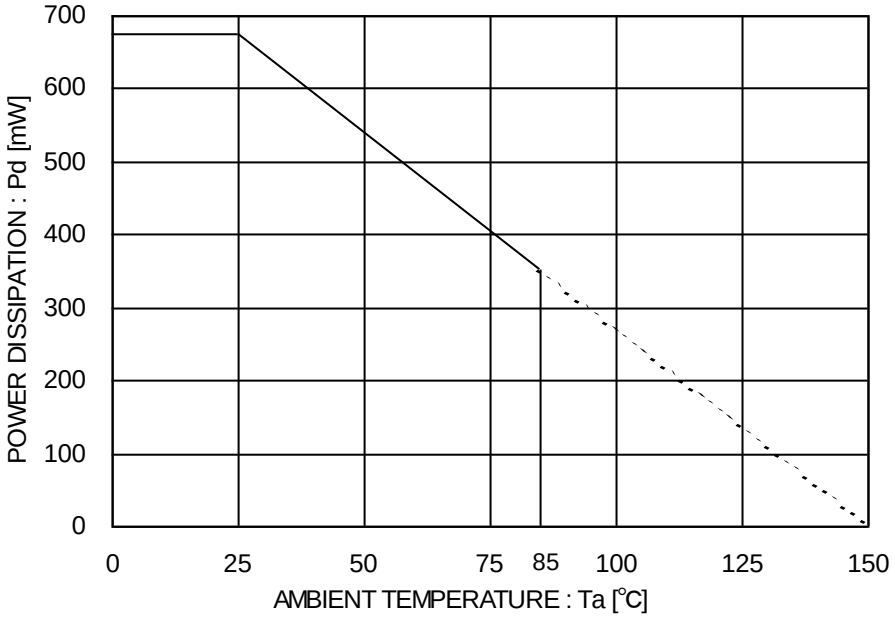

* 70mm x 70mm x 1.6mm Glass Epoxy Board

Figure 54. Power Dissipation Curve (Pd-Ta Curve)

I/O Equivalence Circuit

Symbol	Pin No.	Equivalent Circuit
EN	3	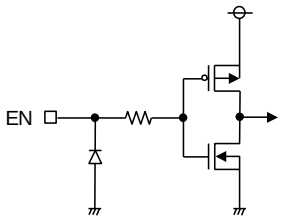
/OC	4	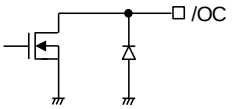
ILIM	5	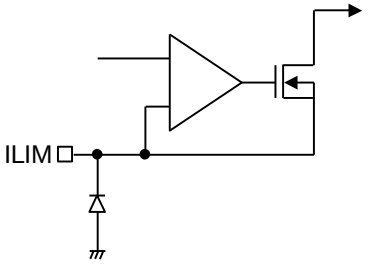
OUT	6	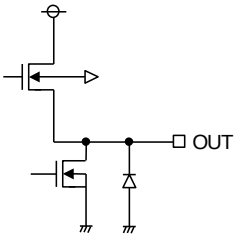

© 2014 ROHM Co., Ltd. All rights reserved.

Operational Notes

1. **Reverse Connection of Power Supply**
   Connecting the power supply in reverse polarity can damage the IC. Take precautions against reverse polarity when connecting the power supply, such as mounting an external diode between the power supply and the IC's power supply pins.

2. **Power Supply Lines**
   Design the PCB layout pattern to provide low impedance supply lines. Separate the ground and supply lines of the digital and analog blocks to prevent noise in the ground and supply lines of the digital block from affecting the analog block. Furthermore, connect a capacitor to ground at all power supply pins. Consider the effect of temperature and aging on the capacitance value when using electrolytic capacitors.

3. **Ground Voltage**
   Ensure that no pins are at a voltage below that of the ground pin at any time, even during transient condition.

4. **Ground Wiring Pattern**
   When using both small-signal and large-current ground traces, the two ground traces should be routed separately but connected to a single ground at the reference point of the application board to avoid fluctuations in the small-signal ground caused by large currents. Also ensure that the ground traces of external components do not cause variations on the ground voltage. The ground lines must be as short and thick as possible to reduce line impedance.

5. **Thermal Consideration**
   Should by any chance the power dissipation rating be exceeded the rise in temperature of the chip may result in deterioration of the properties of the chip. The absolute maximum rating of the Pd stated in this specification is when the IC is mounted on a 70mm x 70mm x 1.6mm glass epoxy board. In case of exceeding this absolute maximum rating, increase the board size and copper area to prevent exceeding the Pd rating.

6. **Recommended Operating Conditions**
   These conditions represent a range within which the expected characteristics of the IC can be approximately obtained. The electrical characteristics are guaranteed under the conditions of each parameter.

7. **Inrush Current**
   When power is first supplied to the IC, it is possible that the internal logic may be unstable and inrush current may flow instantaneously due to the internal powering sequence and delays, especially if the IC has more than one power supply. Therefore, give special consideration to power coupling capacitance, power wiring, width of ground wiring, and routing of connections.

8. **Operation Under Strong Electromagnetic Field**
   Operating the IC in the presence of a strong electromagnetic field may cause the IC to malfunction.

9. **Testing on Application Boards**
   When testing the IC on an application board, connecting a capacitor directly to a low-impedance output pin may subject the IC to stress. Always discharge capacitors completely after each process or step. The IC's power supply should always be turned off completely before connecting or removing it from the test setup during the inspection process. To prevent damage from static discharge, ground the IC during assembly and use similar precautions during transport and storage.

10. **Inter-pin Short and Mounting Errors**
    Ensure that the direction and position are correct when mounting the IC on the PCB. Incorrect mounting may result in damaging the IC. Avoid nearby pins being shorted to each other especially to ground, power supply and output pin. Inter-pin shorts could be due to many reasons such as metal particles, water droplets (in very humid environment) and unintentional solder bridge deposited in between pins during assembly to name a few.

11. **Unused Input Pins**
    Input pins of an IC are often connected to the gate of a MOS transistor. The gate has extremely high impedance and extremely low capacitance. If left unconnected, the electric field from the outside can easily charge it. The small charge acquired in this way is enough to produce a significant effect on the conduction through the transistor and cause unexpected operation of the IC. So unless otherwise specified, unused input pins should be connected to the power supply or ground line.

© 2014 ROHM Co., Ltd. All rights reserved.

Operational Notes – continued

12. Regarding the Input Pin of the IC

This monolithic IC contains P+ isolation and P substrate layers between adjacent elements in order to keep them isolated. P-N junctions are formed at the intersection of the P layers with the N layers of other elements, creating a parasitic diode or transistor. For example (refer to figure below):

When GND > Pin A and GND > Pin B, the P-N junction operates as a parasitic diode.
When GND > Pin B, the P-N junction operates as a parasitic transistor.

Parasitic diodes inevitably occur in the structure of the IC. The operation of parasitic diodes can result in mutual interference among circuits, operational faults, or physical damage. Therefore, conditions that cause these diodes to operate, such as applying a voltage lower than the GND voltage to an input pin (and thus to the P substrate) should be avoided.

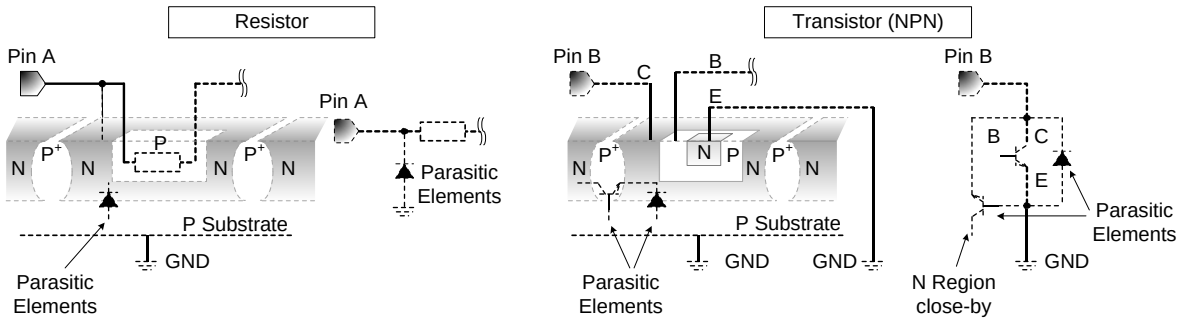

Figure 55. Example of monolithic IC structure

13. Ceramic Capacitor

When using a ceramic capacitor, determine the dielectric constant considering the change of capacitance with temperature and the decrease in nominal capacitance due to DC bias and others.

14. Thermal Shutdown Circuit(TSD)

This IC has a built-in thermal shutdown circuit that prevents heat damage to the IC. Normal operation should always be within the IC's power dissipation rating. If however the rating is exceeded for a continued period, the junction temperature (Tj) will rise which will activate the TSD circuit that will turn OFF all output pins. When the Tj falls below the TSD threshold, the circuits are automatically restored to normal operation.
Note that the TSD circuit operates in a situation that exceeds the absolute maximum ratings and therefore, under no circumstances, should the TSD circuit be used in a set design or for any purpose other than protecting the IC from heat damage.

© 2014 ROHM Co., Ltd. All rights reserved.

Ordering Information

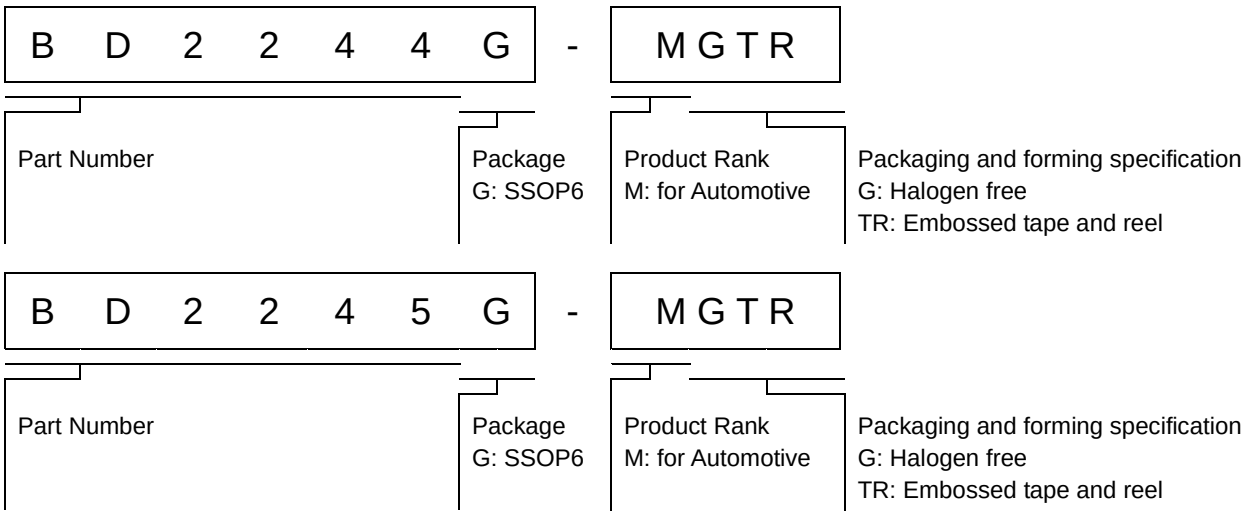

Marking Diagram

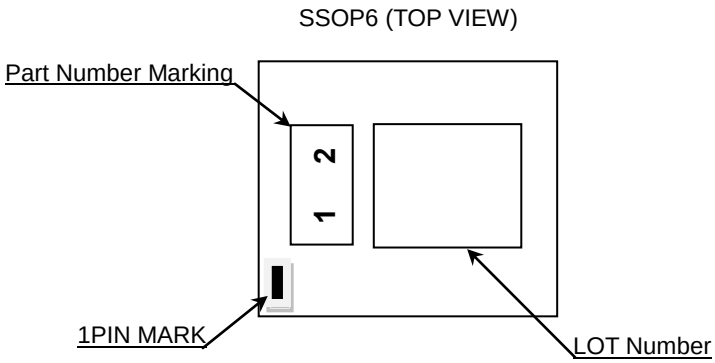

Part Number	Part Number Marking
BD2244G-M	BL
BD2245G-M	BM

© 2014 ROHM Co., Ltd. All rights reserved.

Physical Dimension, Tape and Reel Information

Package Name	SSOP6

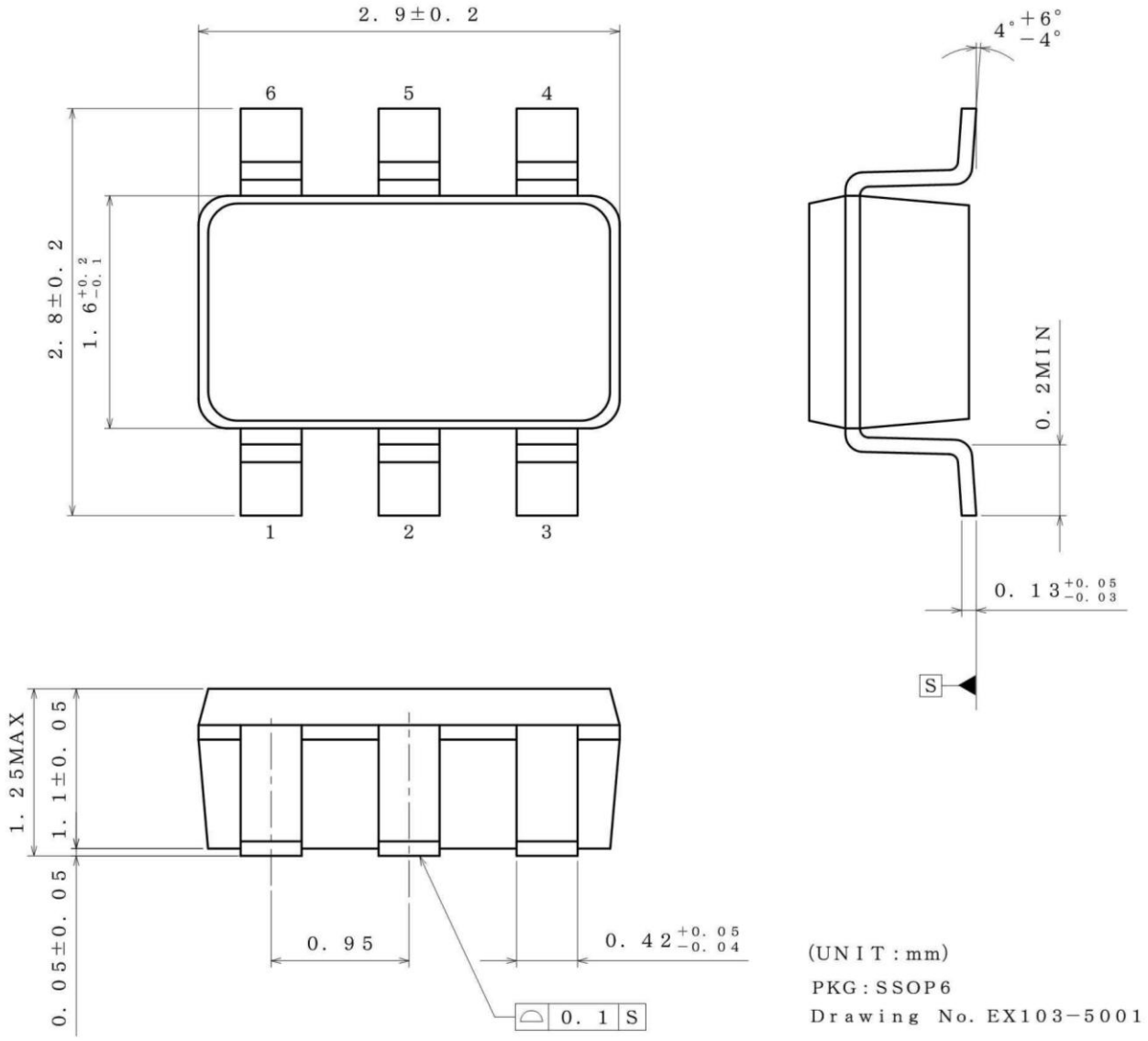

<Tape and Reel information>

Tape	Embossed carrier tape
Quantity	3000pcs
Direction of feed	TR (The direction is the 1pin of product is at the upper right when you hold reel on the left hand and you pull out the tape on the right hand)

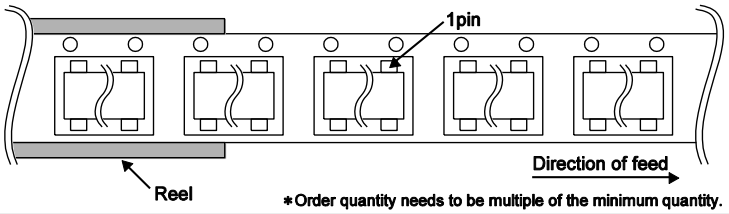

*Order quantity needs to be multiple of the minimum quantity.

© 2014 ROHM Co., Ltd. All rights reserved.

Revision History

Date	Revision	Changes
25.Aug.2014	001	New Release

© 2014 ROHM Co., Ltd. All rights reserved.

Notice

Precaution on using ROHM Products

1. If you intend to use our Products in devices requiring extremely high reliability (such as medical equipment (Note 1), aircraft/spacecraft, nuclear power controllers, etc.) and whose malfunction or failure may cause loss of human life, bodily injury or serious damage to property ("Specific Applications"), please consult with the ROHM sales representative in advance. Unless otherwise agreed in writing by ROHM in advance, ROHM shall not be in any way responsible or liable for any damages, expenses or losses incurred by you or third parties arising from the use of any ROHM's Products for Specific Applications.

(Note1) Medical Equipment Classification of the Specific Applications

JAPAN	USA	EU	CHINA
CLASSⅢ	CLASSⅢ	CLASSⅡb	CLASSⅢ
CLASSⅣ		CLASSⅢ	

2. ROHM designs and manufactures its Products subject to strict quality control system. However, semiconductor products can fail or malfunction at a certain rate. Please be sure to implement, at your own responsibilities, adequate safety measures including but not limited to fail-safe design against the physical injury, damage to any property, which a failure or malfunction of our Products may cause. The following are examples of safety measures:
   [a] Installation of protection circuits or other protective devices to improve system safety
   [b] Installation of redundant circuits to reduce the impact of single or multiple circuit failure

3. Our Products are not designed under any special or extraordinary environments or conditions, as exemplified below. Accordingly, ROHM shall not be in any way responsible or liable for any damages, expenses or losses arising from the use of any ROHM's Products under any special or extraordinary environments or conditions. If you intend to use our Products under any special or extraordinary environments or conditions (as exemplified below), your independent verification and confirmation of product performance, reliability, etc, prior to use, must be necessary:
   [a] Use of our Products in any types of liquid, including water, oils, chemicals, and organic solvents
   [b] Use of our Products outdoors or in places where the Products are exposed to direct sunlight or dust
   [c] Use of our Products in places where the Products are exposed to sea wind or corrosive gases, including Cl_2, H_2S, NH_3, SO_2, and NO_2
   [d] Use of our Products in places where the Products are exposed to static electricity or electromagnetic waves
   [e] Use of our Products in proximity to heat-producing components, plastic cords, or other flammable items
   [f] Sealing or coating our Products with resin or other coating materials
   [g] Use of our Products without cleaning residue of flux (even if you use no-clean type fluxes, cleaning residue of flux is recommended); or Washing our Products by using water or water-soluble cleaning agents for cleaning residue after soldering
   [h] Use of the Products in places subject to dew condensation

4. The Products are not subject to radiation-proof design.

5. Please verify and confirm characteristics of the final or mounted products in using the Products.

6. In particular, if a transient load (a large amount of load applied in a short period of time, such as pulse. is applied, confirmation of performance characteristics after on-board mounting is strongly recommended. Avoid applying power exceeding normal rated power; exceeding the power rating under steady-state loading condition may negatively affect product performance and reliability.

7. De-rate Power Dissipation (Pd) depending on Ambient temperature (Ta). When used in sealed area, confirm the actual ambient temperature.

8. Confirm that operation temperature is within the specified range described in the product specification.

9. ROHM shall not be in any way responsible or liable for failure induced under deviant condition from what is defined in this document.

Precaution for Mounting / Circuit board design

1. When a highly active halogenous (chlorine, bromine, etc.) flux is used, the residue of flux may negatively affect product performance and reliability.

2. In principle, the reflow soldering method must be used; if flow soldering method is preferred, please consult with the ROHM representative in advance.

For details, please refer to ROHM Mounting specification

© 2013 ROHM Co., Ltd. All rights reserved.

Precautions Regarding Application Examples and External Circuits

1. If change is made to the constant of an external circuit, please allow a sufficient margin considering variations of the characteristics of the Products and external components, including transient characteristics, as well as static characteristics.

2. You agree that application notes, reference designs, and associated data and information contained in this document are presented only as guidance for Products use. Therefore, in case you use such information, you are solely responsible for it and you must exercise your own independent verification and judgment in the use of such information contained in this document. ROHM shall not be in any way responsible or liable for any damages, expenses or losses incurred by you or third parties arising from the use of such information.

Precaution for Electrostatic

This Product is electrostatic sensitive product, which may be damaged due to electrostatic discharge. Please take proper caution in your manufacturing process and storage so that voltage exceeding the Products maximum rating will not be applied to Products. Please take special care under dry condition (e.g. Grounding of human body / equipment / solder iron, isolation from charged objects, setting of Ionizer, friction prevention and temperature / humidity control).

Precaution for Storage / Transportation

1. Product performance and soldered connections may deteriorate if the Products are stored in the places where:
   - [a] the Products are exposed to sea winds or corrosive gases, including Cl2, H2S, NH3, SO2, and NO2
   - [b] the temperature or humidity exceeds those recommended by ROHM
   - [c] the Products are exposed to direct sunshine or condensation
   - [d] the Products are exposed to high Electrostatic

2. Even under ROHM recommended storage condition, solderability of products out of recommended storage time period may be degraded. It is strongly recommended to confirm solderability before using Products of which storage time is exceeding the recommended storage time period.

3. Store / transport cartons in the correct direction, which is indicated on a carton with a symbol. Otherwise bent leads may occur due to excessive stress applied when dropping of a carton.

4. Use Products within the specified time after opening a humidity barrier bag. Baking is required before using Products of which storage time is exceeding the recommended storage time period.

Precaution for Product Label

QR code printed on ROHM Products label is for ROHM's internal use only.

Precaution for Disposition

When disposing Products please dispose them properly using an authorized industry waste company.

Precaution for Foreign Exchange and Foreign Trade act

Since our Products might fall under controlled goods prescribed by the applicable foreign exchange and foreign trade act, please consult with ROHM representative in case of export.

Precaution Regarding Intellectual Property Rights

1. All information and data including but not limited to application example contained in this document is for reference only. ROHM does not warrant that foregoing information or data will not infringe any intellectual property rights or any other rights of any third party regarding such information or data. ROHM shall not be in any way responsible or liable for infringement of any intellectual property rights or other damages arising from use of such information or data.:

2. No license, expressly or implied, is granted hereby under any intellectual property rights or other rights of ROHM or any third parties with respect to the information contained in this document.

Other Precaution

1. This document may not be reprinted or reproduced, in whole or in part, without prior written consent of ROHM.

2. The Products may not be disassembled, converted, modified, reproduced or otherwise changed without prior written consent of ROHM.

3. In no event shall you use in any way whatsoever the Products and the related technical information contained in the Products or this document for any military purposes, including but not limited to, the development of mass-destruction weapons.

4. The proper names of companies or products described in this document are trademarks or registered trademarks of ROHM, its affiliated companies or third parties.

© 2013 ROHM Co., Ltd. All rights reserved.

General Precaution

1. Before you use our Products, you are requested to carefully read this document and fully understand its contents. ROHM shall not be in any way responsible or liable for failure, malfunction or accident arising from the use of any ROHM's Products against warning, caution or note contained in this document.

2. All information contained in this document is current as of the issuing date and subject to change without any prior notice. Before purchasing or using ROHM's Products, please confirm the latest information with a ROHM sales representative.

3. The information contained in this document is provided on an "as is" basis and ROHM does not warrant that all information contained in this document is accurate and/or error-free. ROHM shall not be in any way responsible or liable for any damages, expenses or losses incurred by you or third parties resulting from inaccuracy or errors of or concerning such information.

© 2014 ROHM Co., Ltd. All rights reserved.