General Purpose Transistor

PNP Silicon

BCW68GLT1

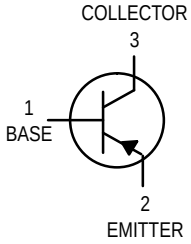

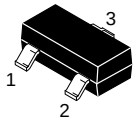

CASE 318–08, STYLE 6
SOT–23 (TO–236AB)

MAXIMUM RATINGS

Rating	Symbol	Value	Unit
Collector–Emitter Voltage	V_{CEO}	–45	Vdc
Collector–Base Voltage	V_{CBO}	–60	Vdc
Emitter–Base Voltage	V_{EBO}	–5.0	Vdc
Collector Current — Continuous	I_C	–800	mAdc

DEVICE MARKING

BCW68GLT1 = DH

THERMAL CHARACTERISTICS

Characteristic	Symbol	Max	Unit
Total Device Dissipation FR-5 Board (1) T_A = 25°C Derate above 25°C	P_D	225 1.8	mW mW/°C
Thermal Resistance, Junction to Ambient	$R_{\theta JA}$	556	°C/W
Total Device Dissipation Alumina Substrate, (2) T_A = 25°C Derate above 25°C	P_D	300 2.4	mW mW/°C
Thermal Resistance, Junction to Ambient	$R_{\theta JA}$	417	°C/W
Junction and Storage Temperature	T_J, T_{stg}	–55 to +150	°C

ELECTRICAL CHARACTERISTICS (T_A = 25°C unless otherwise noted)

Characteristic	Symbol	Min	Typ	Max	Unit
OFF CHARACTERISTICS					
Collector–Emitter Breakdown Voltage (I_C = –10 mAdc, I_B = 0)	$V_{(BR)CEO}$	–45	—	—	Vdc
Collector–Emitter Breakdown Voltage (I_C = –10 μAdc, V_{EB} = 0)	$V_{(BR)CES}$	–60	—	—	Vdc
Emitter–Base Breakdown Voltage (I_E = –10 μAdc, I_C = 0)	$V_{(BR)EBO}$	–5.0	—	—	Vdc
Collector Cutoff Current (V_{CE}= –45 Vdc, I_E = 0) (V_{CE}= –45 Vdc, I_B = 0, T_A = 150°C)	I_{CES}	 — —	 — —	 –20 –10	 nAdc μAdc
Emitter Cutoff Current (V_{EB} = –4.0 Vdc, I_C = 0)	I_{EBO}	—	—	–20	nAdc

1. FR–5 = 1.0 x 0.75 x 0.062 in.
2. Alumina = 0.4 x 0.3 x 0.024 in. 99.5% alumina

Thermal Clad is a trademark of the Bergquist Company

© Motorola, Inc. 1996

ELECTRICAL CHARACTERISTICS (T_A = 25°C unless otherwise noted) (Continued)

Characteristic	Symbol	Min	Typ	Max	Unit
ON CHARACTERISTICS					
DC Current Gain (I_C = –10 mAdc, V_{CE} = –1.0 Vdc) (I_C = –100 mAdc, V_{CE} = –1.0 Vdc) (I_C = –300 mAdc, V_{CE} = –1.0 Vdc)	h_{FE}	 120 160 60	 — — —	 400 — —	—
Collector–Emitter Saturation Voltage (I_C = –300 mAdc, I_B = –30 mAdc)	$V_{CE(sat)}$	—	—	–1.5	Vdc
Base–Emitter Saturation Voltage (I_C = –500 mAdc, I_B = –50 mAdc)	$V_{BE(sat)}$	—	—	–2.0	Vdc
SMALL–SIGNAL CHARACTERISTICS					
Current–Gain — Bandwidth Product (I_C = –20 mAdc, V_{CE} = –10 Vdc, f = 100 MHz)	f_T	100	—	—	MHz
Output Capacitance (V_{CB}= –10 Vdc, I_E = 0, f = 1.0 MHz)	C_{obo}	—	—	18	pF
Input Capacitance (V_{EB}= –0.5 Vdc, I_C = 0, f = 1.0 MHz)	C_{ibo}	—	—	105	pF
Noise Figure (I_C= –0.2 mAdc, V_{CE} = –5.0 Vdc, R_S = 1.0 kΩ, f = 1.0 kHz, BW = 200 Hz)	N_F	—	—	10	dB

INFORMATION FOR USING THE SOT–23 SURFACE MOUNT PACKAGE

MINIMUM RECOMMENDED FOOTPRINT FOR SURFACE MOUNTED APPLICATIONS

Surface mount board layout is a critical portion of the total design. The footprint for the semiconductor packages must be the correct size to insure proper solder connection interface between the board and the package. With the correct pad geometry, the packages will self align when subjected to a solder reflow process.

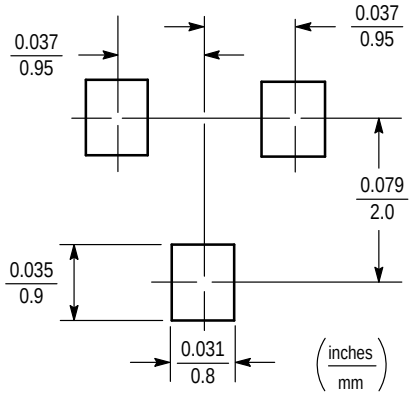

SOT–23

SOT–23 POWER DISSIPATION

The power dissipation of the SOT–23 is a function of the pad size. This can vary from the minimum pad size for soldering to a pad size given for maximum power dissipation. Power dissipation for a surface mount device is determined by $T_{J(max)}$, the maximum rated junction temperature of the die, $R_{\theta JA}$, the thermal resistance from the device junction to ambient, and the operating temperature, T_A. Using the values provided on the data sheet for the SOT–23 package, P_D can be calculated as follows:

$$P_D = \frac{T_{J(max)} - T_A}{R_{\theta JA}}$$

The values for the equation are found in the maximum ratings table on the data sheet. Substituting these values into the equation for an ambient temperature T_A of 25°C, one can calculate the power dissipation of the device which in this case is 225 milliwatts.

$$P_D = \frac{150°C - 25°C}{556°C/W} = 225 \text{ milliwatts}$$

The 556°C/W for the SOT–23 package assumes the use of the recommended footprint on a glass epoxy printed circuit board to achieve a power dissipation of 225 milliwatts. There are other alternatives to achieving higher power dissipation from the SOT–23 package. Another alternative would be to use a ceramic substrate or an aluminum core board such as Thermal Clad™. Using a board material such as Thermal Clad, an aluminum core board, the power dissipation can be doubled using the same footprint.

SOLDERING PRECAUTIONS

The melting temperature of solder is higher than the rated temperature of the device. When the entire device is heated to a high temperature, failure to complete soldering within a short time could result in device failure. Therefore, the following items should always be observed in order to minimize the thermal stress to which the devices are subjected.

- Always preheat the device.
- The delta temperature between the preheat and soldering should be 100°C or less.*
- When preheating and soldering, the temperature of the leads and the case must not exceed the maximum temperature ratings as shown on the data sheet. When using infrared heating with the reflow soldering method, the difference shall be a maximum of 10°C.
- The soldering temperature and time shall not exceed 260°C for more than 10 seconds.
- When shifting from preheating to soldering, the maximum temperature gradient shall be 5°C or less.
- After soldering has been completed, the device should be allowed to cool naturally for at least three minutes. Gradual cooling should be used as the use of forced cooling will increase the temperature gradient and result in latent failure due to mechanical stress.
- Mechanical stress or shock should not be applied during cooling.

* Soldering a device without preheating can cause excessive thermal shock and stress which can result in damage to the device.

PACKAGE DIMENSIONS

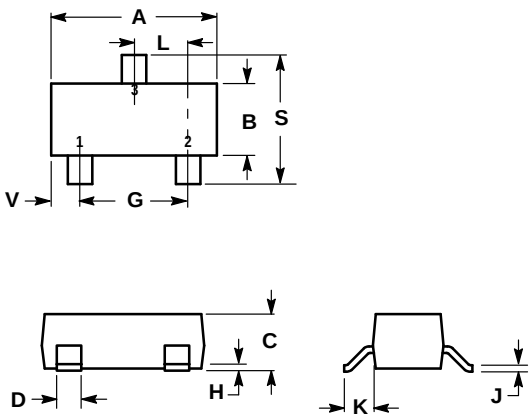

NOTES:
1. DIMENSIONING AND TOLERANCING PER ANSI Y14.5M, 1982.
2. CONTROLLING DIMENSION: INCH.
3. MAXIMUM LEAD THICKNESS INCLUDES LEAD FINISH THICKNESS. MINIMUM LEAD THICKNESS IS THE MINIMUM THICKNESS OF BASE MATERIAL.

	INCHES		MILLIMETERS	
DIM	MIN	MAX	MIN	MAX
A	0.1102	0.1197	2.80	3.04
B	0.0472	0.0551	1.20	1.40
C	0.0350	0.0440	0.89	1.11
D	0.0150	0.0200	0.37	0.50
G	0.0701	0.0807	1.78	2.04
H	0.0005	0.0040	0.013	0.100
J	0.0034	0.0070	0.085	0.177
K	0.0180	0.0236	0.45	0.60
L	0.0350	0.0401	0.89	1.02
S	0.0830	0.0984	2.10	2.50
V	0.0177	0.0236	0.45	0.60

STYLE 6:
PIN 1. BASE
2. EMITTER
3. COLLECTOR

CASE 318–08
ISSUE AE
SOT–23 (TO–236AB)

Motorola reserves the right to make changes without further notice to any products herein. Motorola makes no warranty, representation or guarantee regarding the suitability of its products for any particular purpose, nor does Motorola assume any liability arising out of the application or use of any product or circuit, and specifically disclaims any and all liability, including without limitation consequential or incidental damages. “Typical” parameters can and do vary in different applications. All operating parameters, including “Typicals” must be validated for each customer application by customer’s technical experts. Motorola does not convey any license under its patent rights nor the rights of others. Motorola products are not designed, intended, or authorized for use as components in systems intended for surgical implant into the body, or other applications intended to support or sustain life, or for any other application in which the failure of the Motorola product could create a situation where personal injury or death may occur. Should Buyer purchase or use Motorola products for any such unintended or unauthorized application, Buyer shall indemnify and hold Motorola and its officers, employees, subsidiaries, affiliates, and distributors harmless against all claims, costs, damages, and expenses, and reasonable attorney fees arising out of, directly or indirectly, any claim of personal injury or death associated with such unintended or unauthorized use, even if such claim alleges that Motorola was negligent regarding the design or manufacture of the part. Motorola and M are registered trademarks of Motorola, Inc. Motorola, Inc. is an Equal Opportunity/Affirmative Action Employer.

How to reach us:
USA/EUROPE: Motorola Literature Distribution;
P.O. Box 20912; Phoenix, Arizona 85036. 1–800–441–2447

JAPAN: Nippon Motorola Ltd.; Tatsumi–SPD–JLDC, Toshikatsu Otsuki,
6F Seibu–Butsuryu–Center, 3–14–2 Tatsumi Koto–Ku, Tokyo 135, Japan. 03–3521–8315

MFAX: RMFAX0@email.sps.mot.com – TOUCHTONE (602) 244–6609
INTERNET: http://Design–NET.com

HONG KONG: Motorola Semiconductors H.K. Ltd.; 8B Tai Ping Industrial Park,
51 Ting Kok Road, Tai Po, N.T., Hong Kong. 852–26629298