BROADCOM®
Connecting everything®

BCM8128
PRODUCT Brief

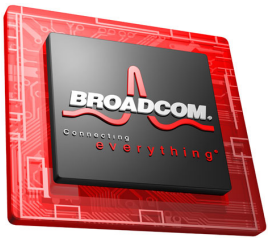

MULTI-RATE 10-GBPS SONET/SDH/10GE/FEC MUX

FEATURES

- 10-Gigabit MSA (Multi-Source Agreement) compliant
- Fully integrated Clock Multiplication Unit (CMU) supports multiple rates: OC-192, 10GE, 10GFC and its FEC rates
- 16:1 multiplexer with LVDS data input
- Configurable divide by 16 or 32 clock modes
- Configurable LVDS input clock-to-data bus timing skew control
- On-chip 16 x 10 FIFO eliminates system timing issues
- Serial data polarity invert
- Bit order reversal
- Low Jitter 10 Gigabit Output Clock for retiming lased Tx clock output
- Lock detect
- Core power supply: 1.8V
- I/O power supply: CML at 1.8V, LVDS and CMOS at 1.8V or 3.3V
- Power consumption: 450 mW
- Standard CMOS fabrication process
- 127-pin BGA package

SUMMARY OF BENEFITS

- Compliant with Optical Internetworking Forum (OIF), Telcordia, ITU-T, ANSI, and IEEE 802.3ae industry standards.
- Reduces design cycle and time to market.
- High level of integration allows for higher port density solutions.
- Uses the most effective silicon economy of scale for CMOS-based devices.
- Low-power consumption eliminates the need for external cooling sources.

APPLICATIONS

- OC-192/STM-64/10GE transmission equipment
- SONET/SDH optical modules
- ADD/DROP multiplexers
- Digital cross-connects
- ATM switch backbones
- SONET test equipment
- Terabit routers
- Edge routers

BCM8128 Functional Block Diagram

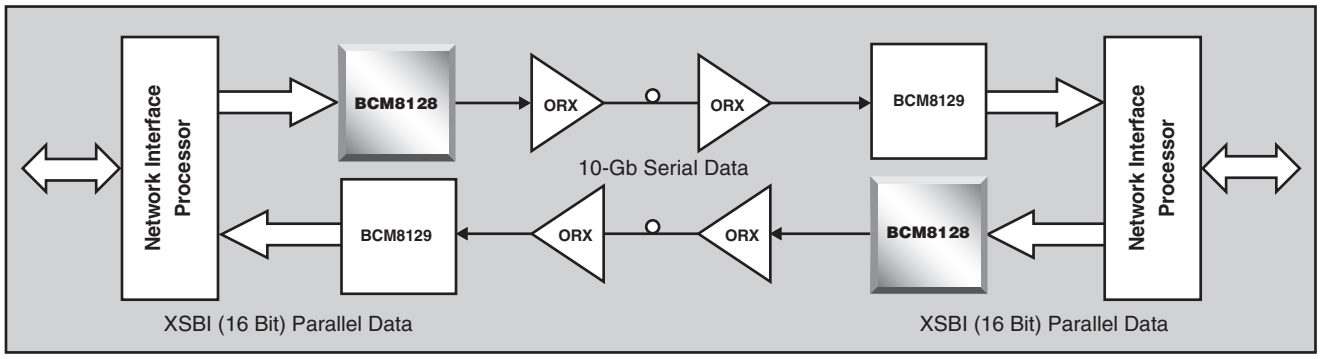

BROADCOM