BROADCOM®
Connecting everything®

BCM3033
PRODUCT Brief

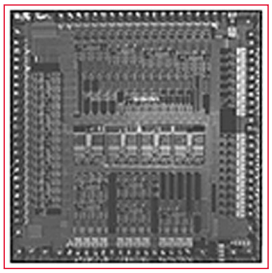

BCM3033 QAMLINK® UNIVERSAL MODULATOR

BCM3033 FEATURES

- **BCM3033 is a universal headend QAM modulator**
- **Integrated QAMLink modulator**
  - Supports 4, 16, 32, 64, 128 and 256-QAM
  - Variable data rates up to 7 megabaud
  - Linear phase digital square-root Nyquist transmit filters
  - >60-dB stop band attenuation in digital filters
  - Perfect quadrature amplitude and phase balance
  - X/sinX filter for DAC distortion compensation
- **Integrated ITU-T J.83/Annex A (DVB/DAVIC/IEEE802.14), Annex B (DigiCipher® II/ SCTE/DOCSIS™/EuroDOCSIS/IEEE 802.14), and Annex C (Japan) FEC Encoding**
- **Integrated 10-bit digital-to-analog converter**
- **Compatible with Broadcom's QAMLink receivers**
- **BSC or SPI-compatible microcontroller interface**
- **JTAG test interface**
- **120-pin PQFP package**

SUMMARY OF BENEFITS

- **A high-performance, integrated solution for modulators in digital cable TV headend, digital cable modem headend, digital microwave radio, SMATV and MMDS applications**
- **An integrated solution that reduces board space and manufacturing costs**
- **A flexible solution that supports the FEC encoding standards for North America, Europe, and Asia**
- **A universal modulator solution that supports all data rates worldwide**

Cable Modem Termination System

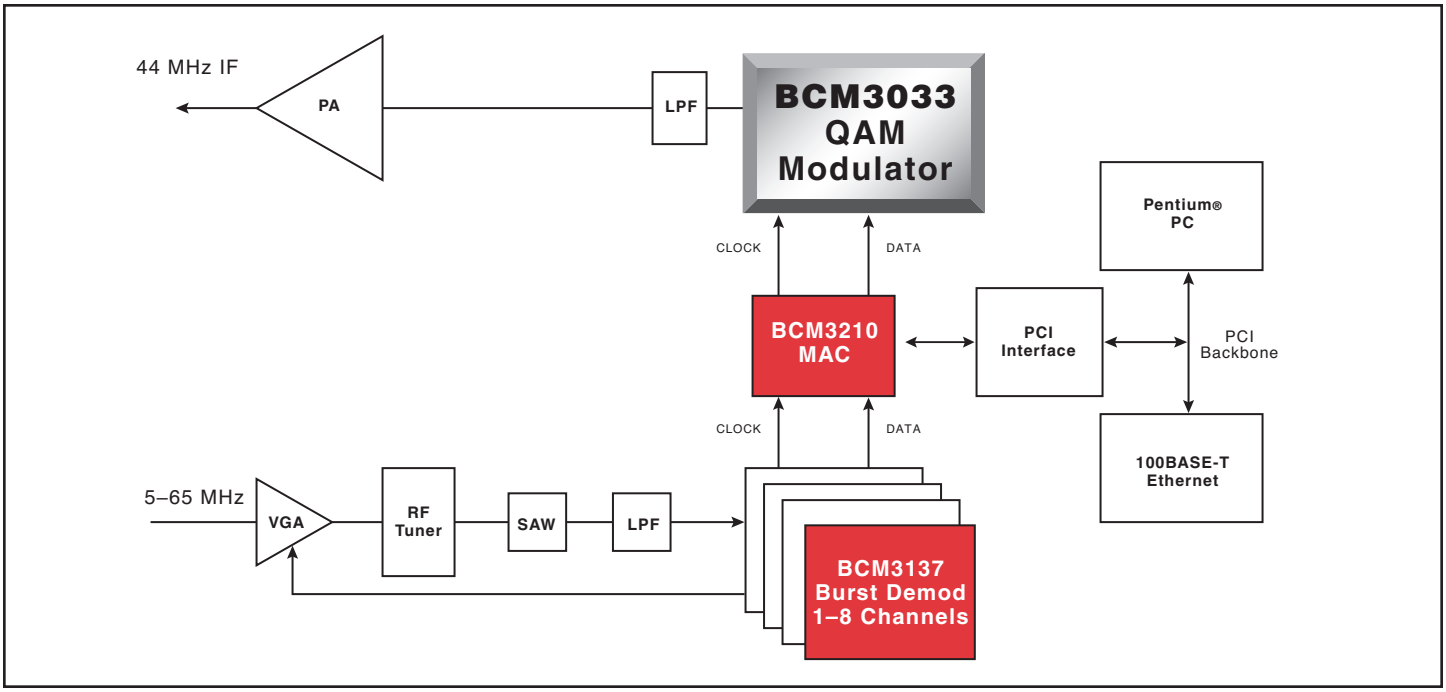

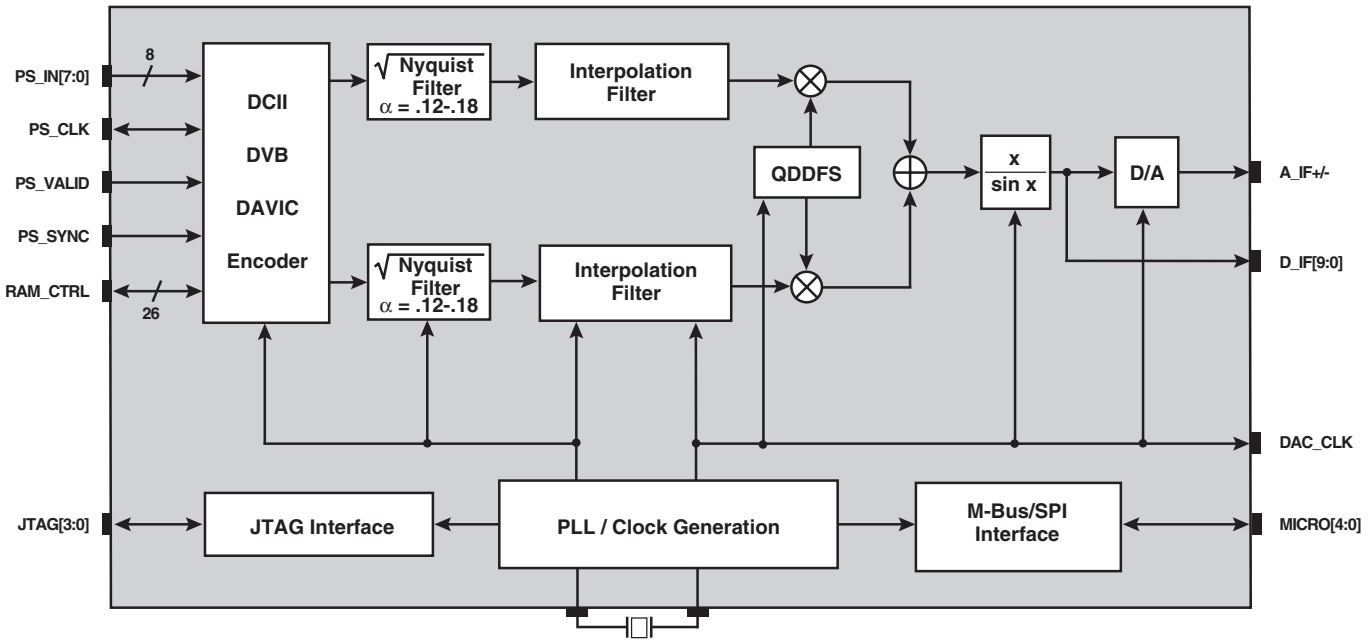

The **BCM3033** QAMLink Universal Modulator is a highly-integrated solution that significantly decreases the board space and cost of modulators in digital cable TV headends, digital cable modem headends, digital microwave radio, SMATV and MMDS applications. Integrated features in the **BCM3033** include an integrated ITU-T J.83 Annex A (DVB/DAVIC/ IEEE802.14), Annex B (DigiCipher® II/SCTE/DOCSIS/EuroDOCSIS/ IEEE802.14), and Annex C (Japan) FEC encoder, a QAM modulator and a D/A converter. The encoder provides coding gain and burst error correction and can be programmed to comply with the ITU-T J.83 Annex A, Annex B and Annex C coding standards. Baseband filtering and quadrature upconversion of the resulting signal is provided by the integrated QAM modulator, which can achieve IF frequencies of up to half the output sample rate.

The QAM modulator is rate adaptable up to 7 megabaud and supports 4-, 16-, 32-, 64-, 128-, and 256-QAM. triple linear-phase square-root Nyquist baseband filters are in the QAM modulator and have a programmable excess bandwidth factor of 12%, 15% or 18%. The QAM modulator also has an X/sinX filter that compensates for DAC distortion. The integrated DAC in the **BCM3033** is a 10-bit, 114-MS/s DAC with differential analog outputs.

Operation of the **BCM3033** involves a serial or parallel bit stream input that can be passed through the FEC encoder or directly to the modulator. The resulting data is interpolated, filtered, and modulated to the IF carrier. The modulator provides a 10-bit output at the chosen sample rate, which is converted to a 2-Vpp differential analog output waveform by the integrated 10-bit D/A converter.

The **BCM3033** is a flexible, cost-effective worldwide solution. Because the chip accepts variable data rates and supports multiple digital transmission standards, manufacturers need to develop only one modulator for worldwide use. The integrated feature set in the **BCM3033** significantly reduces the board space in modulators, giving manufactures a chip solution that is both cost effective and easy to use.

Broadcom®, the pulse logo, **QAMLink**® and **Connecting everything**® are trademarks of Broadcom Corporation and its subsidiaries in the United States and certain other countries. All other trademarks are the property of their respective owners.

Connecting everything®

BROADCOM®

BROADCOM CORPORATION
16215 Alton Parkway, P.O. Box 57013
Irvine, California 92619-7013

© 2002 by BROADCOM CORPORATION. All rights reserved.

3033-PB04-R 11.20.02

Phone: 949-450-8700
FAX: 949-450-8710
Email: info@broadcom.com
Web: www.broadcom.com