molex
one company > a world of innovation

This document was generated on 04/12/2010

PLEASE CHECK WWW.MOLEX.COM FOR LATEST PART INFORMATION

Part Number: 0192210397
Status: Active
Description: Compression Style Ring Tongue Terminal for 2/0 AWG Wire, Stud Size 1/2", Un-Plated

Documents:
Drawing (PDF) | RoHS Certificate of Compliance (PDF)

Agency Certification

CSA	LR18689
UL	E32244

General

Product Family	Ring and Spade Terminals
Series	19221
Comments	Heavy Duty
Crimp Quality Equipment	Yes
Mil-Spec	N/A
Product Name	Battery Cable Lug
Type	Ring

Physical

Barrel Type	Closed
Insulation	None
Material - Plating Mating	Tin
Packaging Type	Bag
Stud Size	1/2" (M12)
Termination Interface: Style	Crimp or Compression
Wire Insulation Diameter	N/A
Wire Size AWG	2/0
Wire Size mm²	60.50 - 76.20

Material Info

Old Part Number	BCL-2012

Reference - Drawing Numbers

Sales Drawing	SD-19221-011

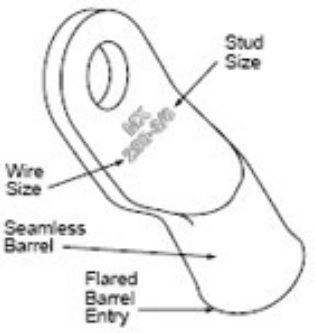

Series image - Reference only

EU RoHS
ELV and RoHS Compliant
REACH SVHC
Not Reviewed
Halogen-Free Status
Not Reviewed

China RoHS

Need more information on product environmental compliance?

Email productcompliance@molex.com
For a multiple part number RoHS Certificate of Compliance, click here

Please visit the Contact Us section for any non-product compliance questions.

Search Parts in this Series
19221Series

Application Tooling | **FAQ**

Tooling specifications and manuals are found by selecting the products below. Crimp Height Specifications are then contained in the Application Tooling Specification document.

Global

Description	Product #
Putt Pump Dieless Head System	0192860065
Manual tool for Crimping non-insulated 8AWG thru 4/0 Terminals	0192940008
Manual Putt Pump Hydraulic System, Die set required	0192860117
Die Set (large) for the HHLS Hydralic Crimper	0192900012

This document was generated on 04/12/2010

PLEASE CHECK WWW.MOLEX.COM FOR LATEST PART INFORMATION

UNPLATED MATERIAL NUMBER	UNPLATED ENG. NUMBER	PLATED MATERIAL NUMBER	PLATED ENGINEERING NUMBER	STUD SIZE	AWG WIRE RANGE	"S" ±.010/(0.25)	"L" ±.030/(0.76)	"W" ±.020/(0.50)	"C" ±.040/(1.02)	"B" ±.015/(0.38)	"T" ±.015/(0.38)
19221 0423	BCL-1014	19221 0422	BCL-1014-PL	1/4/(6.4)	1/0	.278/(7.06)	1.844/(46.84)	.718/(18.24)	.460/(11.68)	.400/(10.16)	.110/(2.80)
19221 0394	BCL-10516	19221 0240	BCL-10516-PL	5/16/(7.9)	1/0	.340/(8.64)	1.844/(46.84)	.718/(18.24)	.460/(11.68)	.400/(10.16)	.110/(2.80)
19221 0377	BCL-1038	19221 0241	BCL-1038-PL	3/8/(9.5)	1/0	.400/(10.16)	1.844/(46.84)	.718/(18.24)	.460/(11.68)	.400/(10.16)	.110/(2.80)
19221 0441	BCL-1038-WP	19221 0440	BCL-1038-WP-PL	3/8/(9.5)	1/0	.400/(10.16)	1.906/(48.41)	.813/(20.65)	.442/(11.23)	.400/(10.16)	.110/(2.80)
19221 0393	BCL-1012	19221 0242	BCL-1012-PL	1/2/(12.7)	1/0	.520/(13.21)	1.844/(46.84)	.718/(18.24)	.460/(11.68)	.400/(10.16)	.110/(2.80)
19221 0437	BCL-1012-WP	19221 0436	BCL-1012-WP-PL	1/2/(12.7)	1/0	.520/(13.21)	1.906/(48.41)	.813/(20.65)	.442/(11.23)	.400/(10.16)	.110/(2.80)
19221 0249	BCL-2014	19221 0234	BCL-2014-PL	1/4/(6.4)	2/0	.278/(7.06)	2.062/(52.37)	.824/(20.93) Ⓕ	.522/(13.26)	.461/(11.71)	.110/(2.80)
19221 0398	BCL-20516	19221 0243	BCL-20516-PL	5/16/(7.9)	2/0	.340/(8.64)	2.062/(52.37)	.824/(20.93) Ⓕ	.522/(13.26)	.461/(11.71)	.110/(2.80)
19221 0379	BCL-2038	19221 0244	BCL-2038-PL	3/8/(9.5)	2/0	.400/(10.16)	2.062/(52.37)	.824/(20.93) Ⓕ	.522/(13.26)	.461/(11.71)	.110/(2.80)
19221 0397	BCL-2012	19221 0245	BCL-2012-PL	1/2/(12.7)	2/0	.520/(13.21)	2.062/(52.37)	.824/(20.93) Ⓕ	.522/(13.26)	.461/(11.71)	.110/(2.80)
19221 0597	BCL-2058	19221 0598	BCL-2058-PL	5/8/(15.9)	2/0	.656/(16.66)	2.062/(52.37)	.824/(20.93) Ⓕ	.522/(13.26)	.461/(11.71)	.110/(2.80)
19221 0478	BCL-3014	19221 0570	BCL-3014-PL	1/4/(6.4)	3/0	.278/(7.06)	2.156/(54.76)	.916/(23.27) Ⓕ	.501/(12.73)	.511/(12.93)	.115/(2.92)
19221 0402	BCL-30516	19221 0246	BCL-30516-PL	5/16/(7.9)	3/0	.340/(8.64)	2.156/(54.76)	.916/(23.27) Ⓕ	.501/(12.73)	.511/(12.93)	.115/(2.92)
19221 0381	BCL-3038	19221 0247	BCL-3038-PL	3/8/(9.5)	3/0	.400/(10.16)	2.156/(54.76)	.916/(23.27) Ⓕ	.501/(12.73)	.511/(12.93)	.115/(2.92)
19221 0401	BCL-3012	19221 0248	BCL-3012-PL	1/2/(12.7)	3/0	.520/(13.21)	2.156/(54.76)	.916/(23.27) Ⓕ	.501/(12.73)	.511/(12.93)	.115/(2.92)
19221 0502	BCL-40516(.625)	19221 0503	BCL-40516-PL(.625)	5/16/(7.9)	4/0	.340/(8.63)	2.688/(68.28)	1.094/(27.78)	.557/(14.15)	.625/(15.88)	.135/(3.43)
19221 0374	BCL-4038(.625)	192210371	BCL-4038-PL(.625)	3/8/(9.5)	4/0	.400/(10.16)	2.688/(68.28)	1.094/(27.78)	.557/(14.15)	.625/(15.88)	.135/(3.43)
19221 0375	BCL-4012(.625)	19221 0372	BCL-4012-PL(.625)	1/2(12.7)	4/0	.520/(13.21)	2.688/(68.28)	1.094/(27.78)	.557/(14.15)	.625/(15.88)	.135/(3.43)
19221 0413	BCL-40516	19221 0412	BCL-40516-PL	5/16/(7.9)	4/0	.340/(8.63)	2.344/(59.54)	.984/(24.99)	.550/(13.97)	.559/(14.20)	.135/(3.43)
19221 0382	BCL-4038	19221 0250	BCL-4038-PL	3/8/(9.5)	4/0	.400/(10.16)	2.344/(59.54)	.984/(24.99)	.550/(13.97)	.559/(14.20)	.135/(3.43)
19221 0403	BCL-4012	19221 0251	BCL-4012-PL	1/2(12.7)	4/0	.520/(13.21)	2.344/(59.54)	.984/(24.99)	.550/(13.97)	.559/(14.20)	.135/(3.43)
19221 0446	BCL-25038	19221 0447	BCL-25038-PL	3/8/(9.5)	250	.400/(10.16)	2.656/(67.46)	1.203/(30.56)	.676/(17.17)	.685/(17.40)	.125/(3.18)
192210652	BCL-4014	192210648	BCL-4014-PL	1/4(6.4)	4/0	.278/(7.061)	2.344/(59.54)	.984/(24.99)	.550/(13.97)	.559/(13.97)	.135/(3.43)

△6

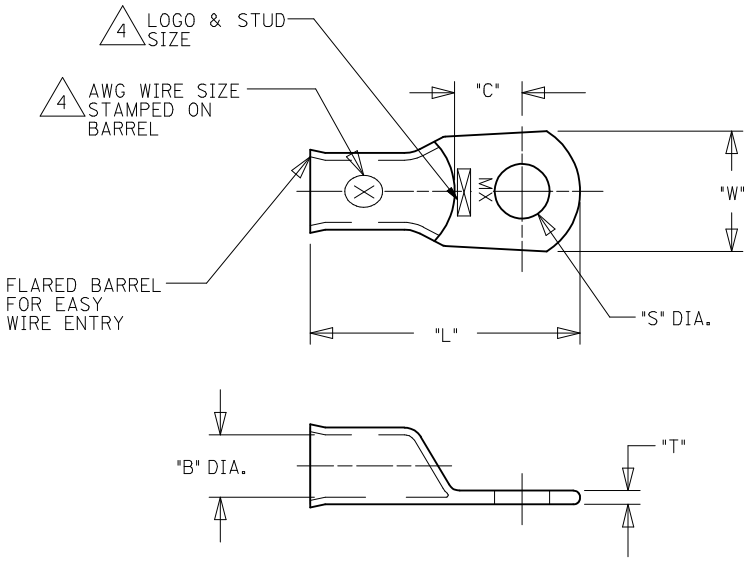

NOTES:

1. FOR INSPECTION SIGHT HOLE, PLEASE CONSULT FACTORY.
2. OTHER STUD SIZES MAY BE AVAILABLE, PLEASE CONSULT FACTORY.
3. MATERIAL: COPPER
   PLATING: TIN
4. △4 MARKINGS CAN BE AT EITHER LOCATION SHOWN.
5. IF TONGUE IS TO BE BENT AT ANY ANGLE, IT MUST BE BENT AROUND A RADIUS ONE HALF THE TONGUE THICKNESS.
6. △6 USE .625/(15.88) BARREL I.D. FOR HIGH STRAND WELDING CABLE.

SALES DRAWING

TONGUE WIDTH 2/0,3/0
EC NO: WNA2009-0341 2009/07/27
DRWN:ETHRODAHL 2009/08/11
CH'KD:JMACNEIL 2009/08/11
APPR:JMACNEIL 2009/08/11
DESCRIPTION
REV

QUALITY SYMBOLS
▼=0
Ⓒ▽=0

GENERAL TOLERANCES (UNLESS SPECIFIED)

	mm	INCH
4 PLACES	± ---	± ---
3 PLACES	± ---	± .005
2 PLACES	± 0.13	± .01
1 PLACE	± 0.25	± ---
ANGULAR ±---°		

DRAFT WHERE APPLICABLE MUST REMAIN WITHIN DIMENSIONS

DIMENSION STYLE: IN/MM
SCALE: --
DESIGN UNITS: INCH
THIRD ANGLE PROJECTION

	DRAWN BY	DATE
	BRE	2002/06/24
	CHECKED BY	DATE
	HEB	2002/06/24
	APPROVED BY	DATE
	RWD	2002/06/24

TITLE: BATTERY CABLE LUG COPPER TERMINALS 1/0, 2/0, 3/0 & 4/0

molex MOLEX INCORPORATED

MATERIAL NO.: SEE CHART
DOCUMENT NO.: SD-19221-011
SHEET NO.: 1 OF 1
SIZE: C

THIS DRAWING CONTAINS INFORMATION THAT IS PROPRIETARY TO MOLEX INCORPORATED AND SHOULD NOT BE USED WITHOUT WRITTEN PERMISSION