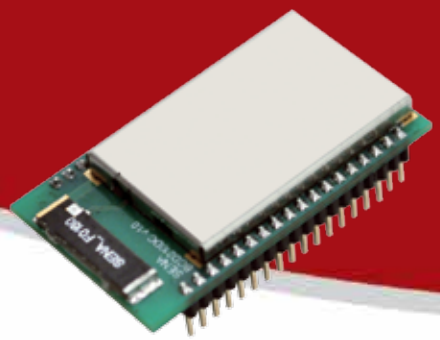

Bluetooth Module

Parani™ BCD210

Features

- Bluetooth Class 2
- Bluetooth v2.0 + EDR specification
- Low Power consumption: 30mA @3.3VDC
- Transmit Power: +4dBm Typical
- Receive sensitivity: -84dBm (0.1% BER)
- Integrated 8Mbit Flash Memory
- Supports Serial Port Profile (SPP)
- Working distance (In an open field): Nom.50m, up to 300m
- Supports chip, stub and dipole antennas
- 802.11 co-existence
- Standard HCI over UART or USB
- Field-proven SPP (Serial Port Profile) firmware supporting up to 4 simultaneous multiple connections
- Firmware upgrade via windows-based software (ParaniUpdater)
- Easy to use Windows configuration tool available.
- ROHS compliant

Specifications

Bluetooth Specifications	Bluetooth v2.0 + EDR
	Class2
	Profile: SPP(Serial Port Profile)
	Working distance: By default antenna is 50m (0.031 mile) supports up to 300m (0.186 mile) at line-of sight
Transmit Power	+4dBm Typical
Receive Sensitivity	-84dBm (0.1% BER)
TX Output Spectrum-Frequency range	2402 MHz – 2480 MHz
Interfaces	UART, USB, I2C, PCM, PIO
Serial Interface	- Serial UART speed up to 921.6kbps - CTS/RTS flow control, DTR/DSR for loop-back & full transfer
PIN Interface	BCD210Sx: 1.27mm SMD Pad 18x2 (36pin) BCD210Dx: 1.27mm Pin Header 18x2 (36pin)
USB Interface	V2.0
Configuration	ParaniWIN, ParaniWizard, Modem AT command set
Firmware Update	ParaniUpdater
Power Consumption	- Nominal: 30mA @3.3VDC - Maximum: 60mA @3.3VDC (100mA @3.3VDC in Test Mode)
Environmental	- Operating temperature: -40°C ~ 85°C - Storage temperature: -40°C ~ 85°C - Humidity: 90% (Non-condensing)
Physical properties	Parani-BCD210 Dimension - DIP type: 16.8 (W) x 28 (L) x 8.0 (H) mm (0.661in x 1.102in x 0.315 in) - SMD type: 14.8 (W) x 28 (L) x 3.0 (H) mm (0.583in x 1.102in x 0.118 in)
	Weights - Parani-BCD210SC: 2g - Parani-BCD210SU: 2g - Parani-BCD210DC: 3g - Parani-BCD210DU: 3g - Parani-BCD210DS: 5g
Approvals	FCC, CE, IC, KC, TELEC, SIG
Warranty	1-year limited warranty

The Parani-BCD210 is a low power embedded Bluetooth Class 2 OEM SMD/DIP module combining antenna for OEM manufactures who want to implement Bluetooth Class 2 functionality with their products cost effectively and also in timely manner.

The BCD210 supports Class 2 Bluetooth transmission level for shorter communication distance up to 300m at line-up sight. The BCD210 supports UART, USB, I2C, PCM, PIO interfaces for the communication with the OEM products

The BCD210 is provided with Bluetooth v2.0+EDR compatible firmware runs internally for SPP (Serial Port Profile) applications by default. The SPP firmware supports up to 4 simultaneous multiple connections and is designed to work out-of-box for real world SPP applications such as POS (Point-of-sales), industrial automation, remote metering and other various applications. Optionally, the BCD210 can be supplied with only software stack up to HCI level so entire Bluetooth stack runs on the host side for the application such as USB dongles for computers or OEM manufacturers can even develop and embed their own firmware into the BCD210.

The BCD210 is fully qualified with Bluetooth v2.0+EDR specification so OEM manufacturers can save cost and time for overall OEM product certifications, which makes the BCD210 ideal solution for larger volume and cost sensitive applications.

Device Diagram

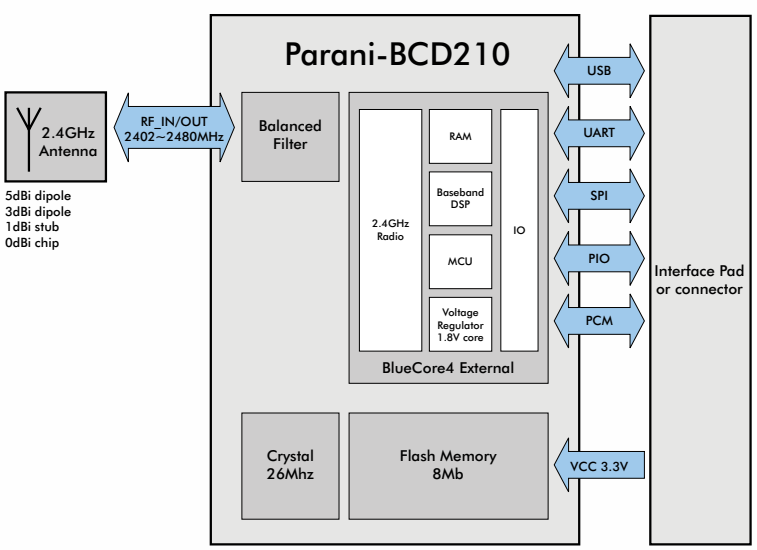

SENA
www.sena.com

Bluetooth Module

Parani™ BCD210

Pin Description

	NAME	DEFINE
1	GND	GND
2	GND	GND
3	NC	NC
4	AIO_0	
5	AIO_1	
6	UART_RTS	UART_RTS
7	UART_RXD	UART_RXD
8	UART_TXD	UART_TXD
9	UART_CTS	UART_CTS
10	USB_DN	USB_DN
11	USB_DP	USB_DP
12	PCM_IN	PCM_IN
13	PCM_SYNC	PCM_SYNC
14	PCM_CLK	PCM_CLK
15	PCM_OUT	PCM_OUT
16	+3V3	+3V3
17	GND	GND
18	RESETB	RESETB

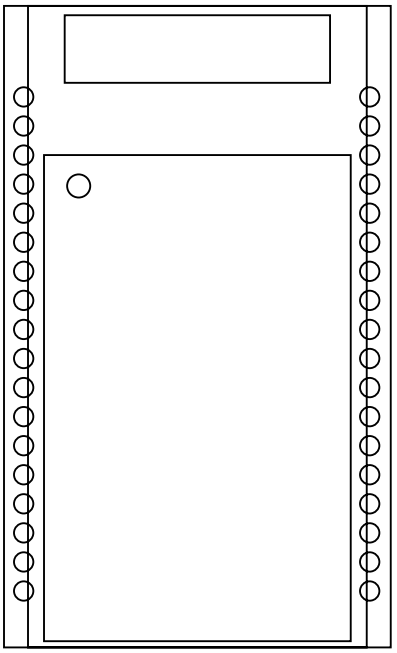

DEFINE	NAME	
GND	GND	36
	PIO_0	35
	PIO_1	34
STATUS_LED1	PIO_11	33
STATUS_LED0	PIO_10	32
	PIO_9	31
	PIO_8	30
UART_DCD	PIO_2	29
UART_DTR	PIO_3	28
F/C_CTRL	PIO_7	27
BT_MODE	PIO_6	26
FACTORY RESET	PIO_5	25
UART_DSR	PIO_4	24
SPI_MOSI	SPI_MOSI	23
SPI_CSB	SPI_CSB	22
SPI_CLK	SPI_CLK	21
SPI_MISO	SPI_MISO	20
GND	GND	19

Ordering Information

Part Number	Description
BCD210SC-00	Bluetooth embedded OEM module SMD Type, Class 2 with chip antenna
BCD210SU-00	Bluetooth embedded OEM module SMD Type, Class 2 with U.FL connector
BCD210DC-00	Bluetooth embedded OEM module DIP Type, Class 2 with chip antenna
BCD210DS-00	Bluetooth embedded OEM module DIP Type, Class 2 with RP-SMA connector
BCD210DU-00	Bluetooth embedded OEM module DIP Type, Class 2 with U.FL connector
BCD210SK-01	Starter kit for Parani-BCD210
BCD210SC-02	Bluetooth embedded OEM module SMD Type, Class 2 with chip antenna
BCD210SU-02	Bluetooth embedded OEM module SMD Type, Class 2 with U.FL connector
BCD210DC-02	Bluetooth embedded OEM module DIP Type, Class 2 with chip antenna
BCD210DS-02	Bluetooth embedded OEM module DIP Type, Class 2 with RP-SMA connector
BCD210DU-02	Bluetooth embedded OEM module DIP Type, Class 2 with U.FL connector
BCD210SK-03	Starter kit for Parani-BCD210

Optional Accessories

Part number	Description
SAT-G01R	1 dBi Stub Antenna, RP-SMA Plug, Right-hand Thread
DAT-G01R	3 dBi Dipole Antenna, RP-SMA Plug, Right-hand Thread
DAT5-G01R	5 dBi Dipole Antenna, RP-SMA Plug, Right-hand Thread
SEC-G01R	15cm RPSMA Antenna Extension Cable, Right-Hand Thread
UEC-G01R	12cm U.FL to RPSMA Cable, Right-Hand Thread

Applications

- High-speed data transceiver systems for short distance communication
- PCs/Personal Digital Assistants (PDA)
- Bluetooth USB dongle
- Bluetooth serial dongle
- Bluetooth access points
- Industrial automation devices
- Automotive applications
- Medical Systems
- Remote metering devices
- POS (Point-of-sales) devices

For more information,
please visit us at http://www.sena.com

U.S. / Canada / South America
Tel: 408-448-1997 Fax: 408-907-3738
Sales and Support Toll Free (US/Canada): 8669-US-SENA (866-987-7362)

EU / Africa
Tel: +33 (0)1 53 53 16 29 Fax: +33 (0)1 70 24 70 90

Asia / Pacific
Tel: +82-2-576-7362 Fax: +82-2-573-7710

Contact us via E-mail
General Information: info@sena.com
Sales & Distribution: sales@sena.com
Technical Support: support@sena.com

SENA
www.sena.com