BC517

Darlington Transistors

NPN Silicon

ON Semiconductor®

http://onsemi.com

Features

- Pb−Free Packages are Available*

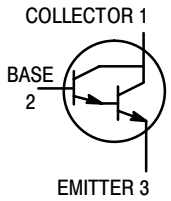

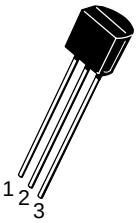

TO−92
CASE 29
STYLE 17

MAXIMUM RATINGS

Rating	Symbol	Value	Unit
Collector−Emitter Voltage	V_{CES}	30	Vdc
Collector−Base Voltage	V_{CB}	40	Vdc
Collector−Emitter Voltage	V_{EB}	10	Vdc
Collector Current − Continuous	I_C	1.0	Adc
Total Power Dissipation @ T_A = 25°C Derate above T_A = 25°C	P_D	625 12	mW mW/°C
Total Power Dissipation @ T_A = 25°C Derate above T_A = 25°C	P_D	1.5 12	W mW/°C
Operating and Storage Junction Temperature Range	T_J, T_{stg}	−55 to +150	°C

THERMAL CHARACTERISTICS

Characteristic	Symbol	Max	Unit
Thermal Resistance, Junction−to−Ambient	$R_{\theta JA}$	200	°C/W
Thermal Resistance, Junction−to−Case	$R_{\theta JC}$	83.3	°C/W

Maximum ratings are those values beyond which device damage can occur. Maximum ratings applied to the device are individual stress limit values (not normal operating conditions) and are not valid simultaneously. If these limits are exceeded, device functional operation is not implied, damage may occur and reliability may be affected.

*For additional information on our Pb−Free strategy and soldering details, please download the ON Semiconductor Soldering and Mounting Techniques Reference Manual, SOLDERRM/D.

MARKING DIAGRAM

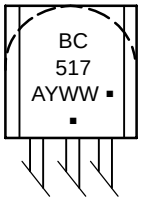

A = Assembly Location
Y = Year
WW = Work Week
▪ = Pb−Free Package
(Note: Microdot may be in either location)

ORDERING INFORMATION

Device	Package	Shipping†
BC517	TO−92	5000 Units / Bulk
BC517G	TO−92 (Pb−Free)	5000 Units / Bulk
BC517RL1	TO−92	2000 / Tape & Reel
BC517RL1G	TO−92 (Pb−Free)	2000 / Tape & Reel
BC517ZL1	TO−92	2000 / Ammo Pack
BC517ZL1G	TO−92 (Pb−Free)	2000 / Ammo Pack

†For information on tape and reel specifications, including part orientation and tape sizes, please refer to our Tape and Reel Packaging Specifications Brochure, BRD8011/D.

© Semiconductor Components Industries, LLC, 2006

ELECTRICAL CHARACTERISTICS (T_A = 25°C unless otherwise noted)

Characteristic	Symbol	Min	Typ	Max	Unit
OFF CHARACTERISTICS					
Collector−Emitter Breakdown Voltage (I_C = 2.0 mAdc, I_{BE} = 0)	$V_{(BR)CES}$	30	–	–	Vdc
Collector−Base Breakdown Voltage (I_C = 10 μAdc, I_E = 0)	$V_{(BR)CBO}$	40	–	–	Vdc
Emitter−Base Breakdown Voltage (I_E = 100 μAdc, I_C = 0)	$V_{(BR)EBO}$	10	–	–	Vdc
Collector Cutoff Current (V_{CE} = 30 Vdc)	I_{CES}	–	–	500	nAdc
Collector Cutoff Current (V_{CB} = 30 Vdc, I_E = 0)	I_{CBO}	–	–	100	nAdc
Emitter Cutoff Current (V_{CB} = 10 Vdc, I_C = 0)	I_{EBO}	–	–	100	nAdc
ON CHARACTERISTICS (Note 1)					
DC Current Gain (I_C = 20 mAdc, V_{CE} = 2.0 Vdc)	h_{FE}	30,000	–	–	–
Collector−Emitter Saturation Voltage (I_C = 100 mAdc, I_B = 0.1 mAdc)	$V_{CE(sat)}$	–	–	1.0	Vdc
Collector−Emitter Saturation Voltage (I_C = 10 mAdc, V_{CE} = 5.0 Vdc)	$V_{BE(on)}$	–	–	1.4	Vdc
SMALL−SIGNAL CHARACTERISTICS					
Current−Gain − Bandwidth Product (Note 2) (I_C = 10 mAdc, V_{CE} = 5.0 Vdc, f = 100 MHz)	f_T	–	200	–	MHz

1. Pulse Test: Pulse Width = 300 μs, Duty Cycle 2.0%.
2. $f_T = |h_{fe}| \bullet f_{test}$

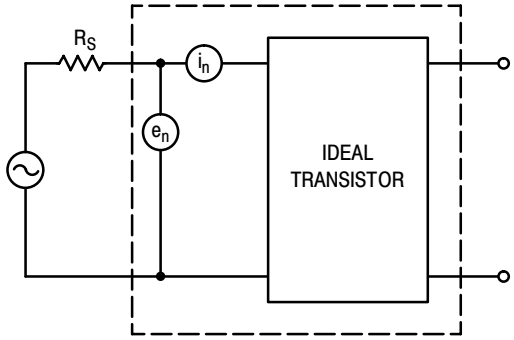

Figure 1. Transistor Noise Model

NOISE CHARACTERISTICS

(V_{CE} = 5.0 Vdc, T_A = 25°C)

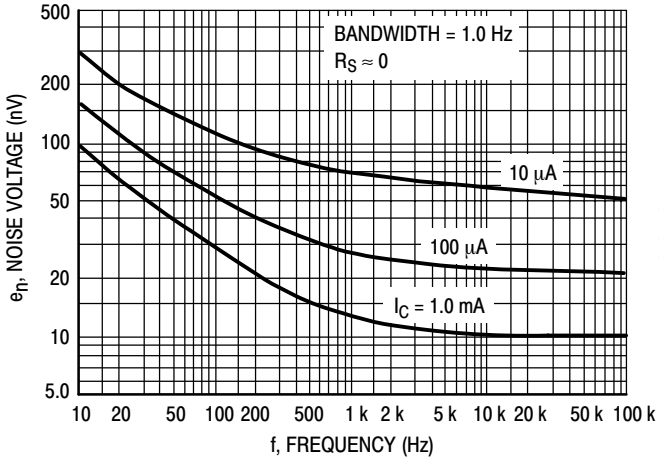

Figure 2. Noise Voltage

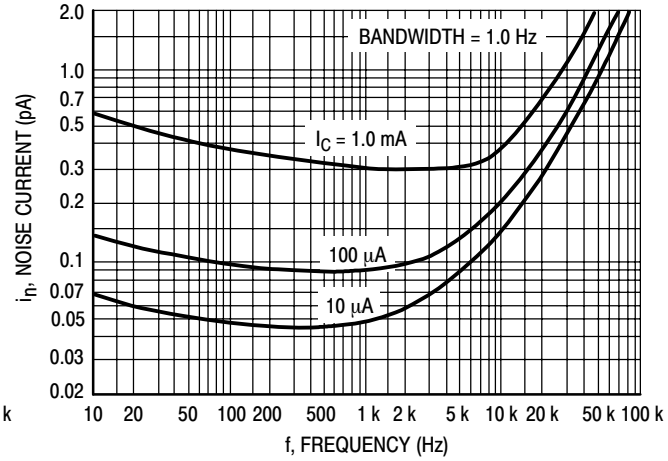

Figure 3. Noise Current

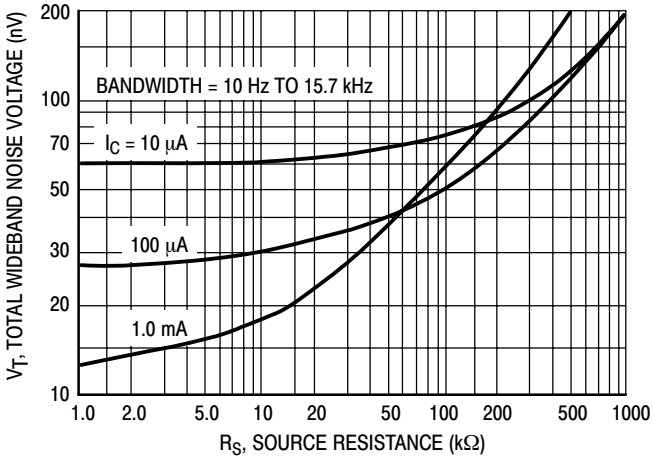

Figure 4. Total Wideband Noise Voltage

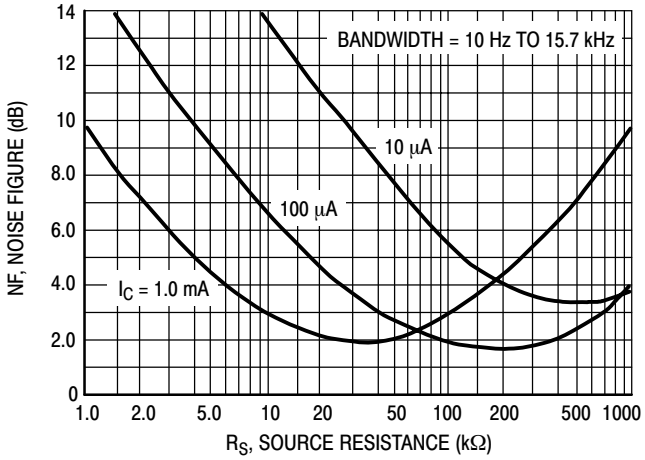

Figure 5. Wideband Noise Figure

SMALL−SIGNAL CHARACTERISTICS

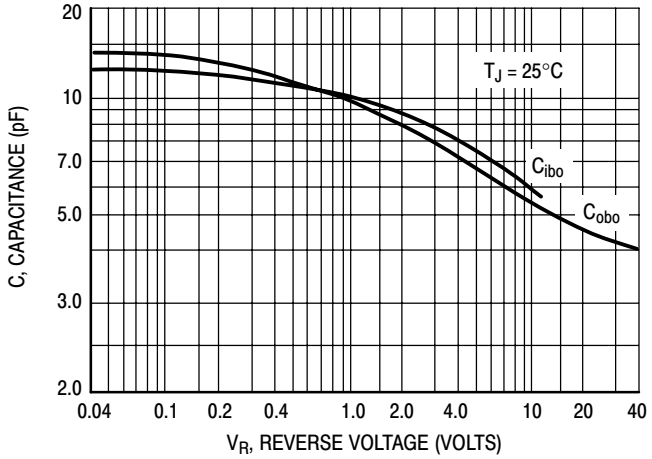

Figure 6. Capacitance

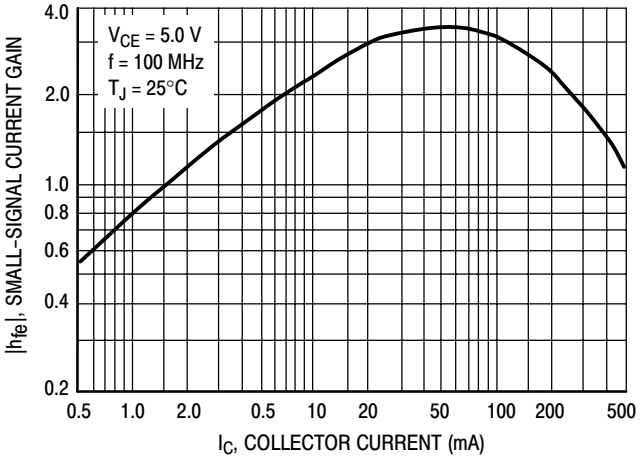

Figure 7. High Frequency Current Gain

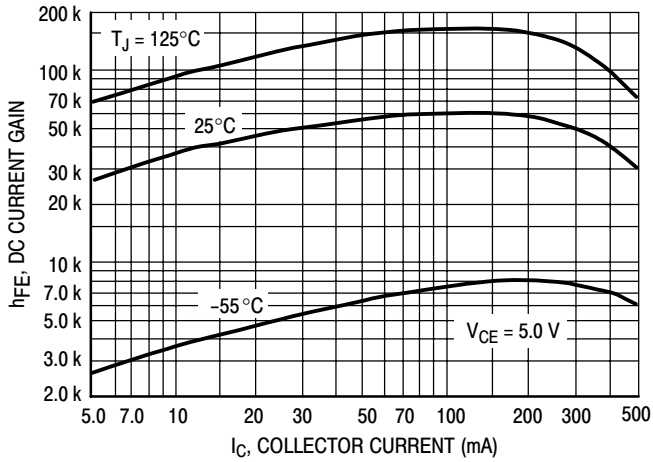

Figure 8. DC Current Gain

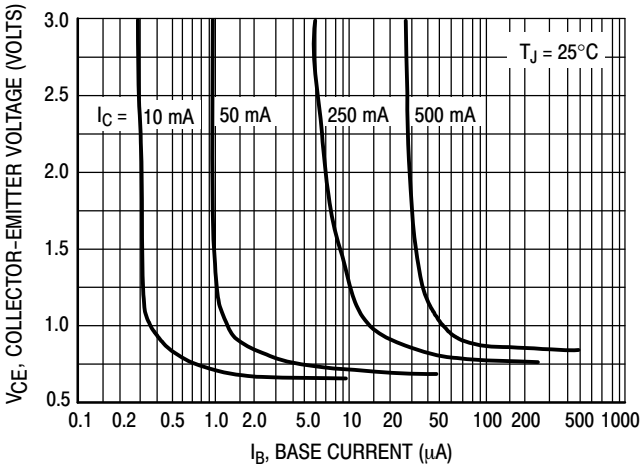

Figure 9. Collector Saturation Region

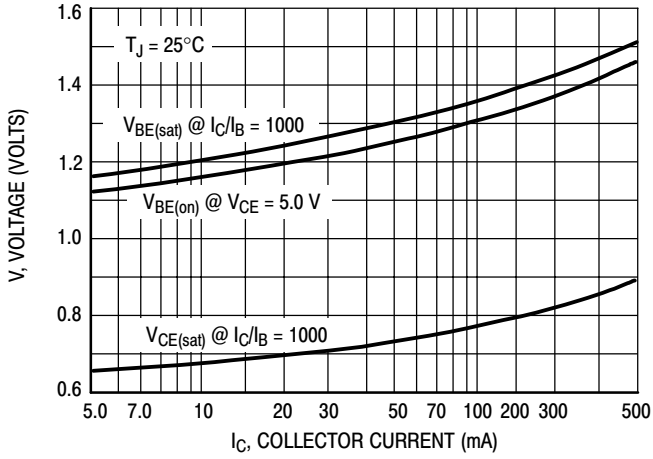

Figure 10. “On” Voltages

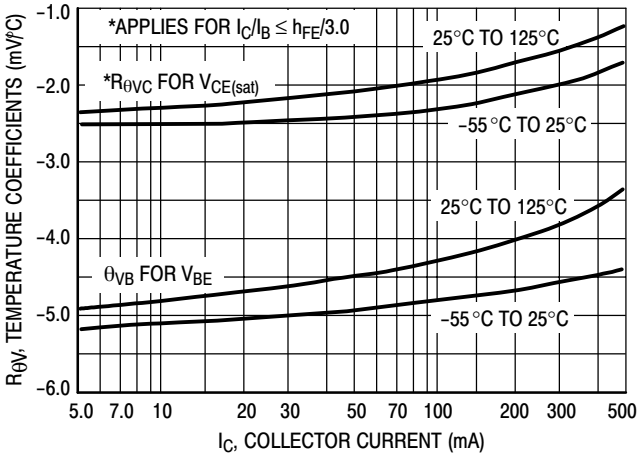

Figure 11. Temperature Coefficients

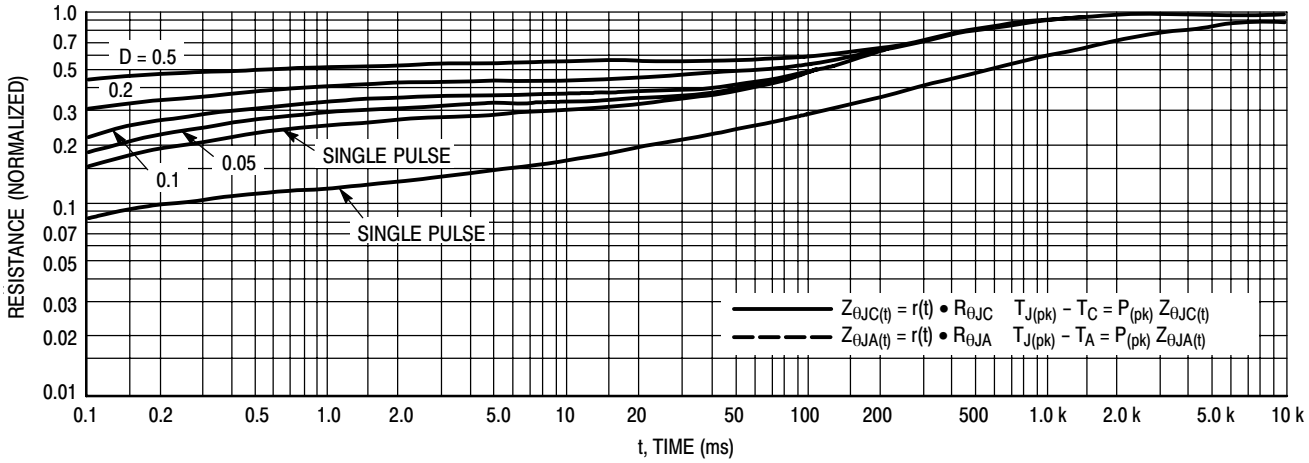

Figure 12. Thermal Response

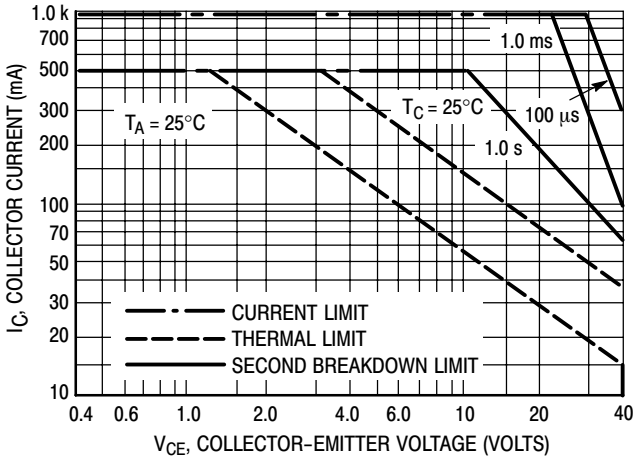

Figure 13. Active Region Safe Operating Area

Design Note: Use of Transient Thermal Resistance Data

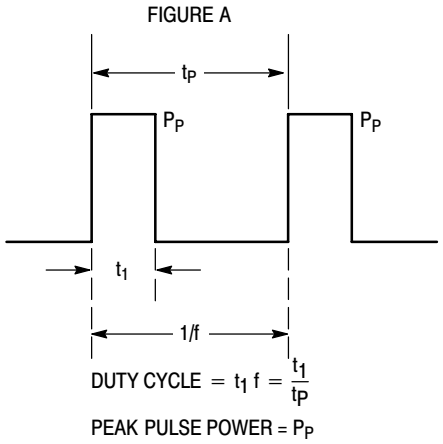

PACKAGE DIMENSIONS

TO−92 (TO−226)
CASE 29−11
ISSUE AL

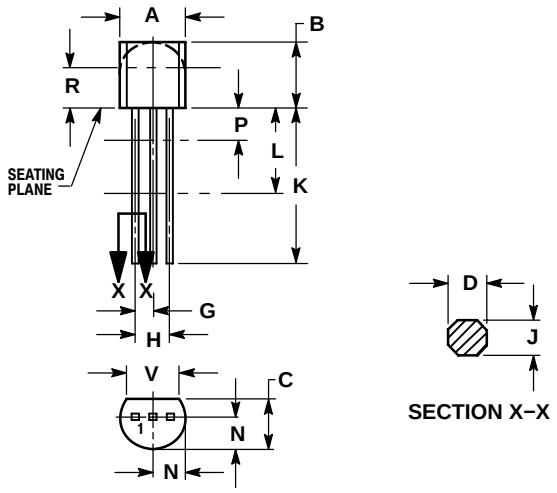

NOTES:
1. DIMENSIONING AND TOLERANCING PER ANSI Y14.5M, 1982.
2. CONTROLLING DIMENSION: INCH.
3. CONTOUR OF PACKAGE BEYOND DIMENSION R IS UNCONTROLLED.
4. LEAD DIMENSION IS UNCONTROLLED IN P AND BEYOND DIMENSION K MINIMUM.

	INCHES		MILLIMETERS	
DIM	MIN	MAX	MIN	MAX
A	0.175	0.205	4.45	5.20
B	0.170	0.210	4.32	5.33
C	0.125	0.165	3.18	4.19
D	0.016	0.021	0.407	0.533
G	0.045	0.055	1.15	1.39
H	0.095	0.105	2.42	2.66
J	0.015	0.020	0.39	0.50
K	0.500	---	12.70	---
L	0.250	---	6.35	---
N	0.080	0.105	2.04	2.66
P	---	0.100	---	2.54
R	0.115	---	2.93	---
V	0.135	---	3.43	---

STYLE 17:
PIN 1. COLLECTOR
2. BASE
3. EMITTER

ON Semiconductor and ON are registered trademarks of Semiconductor Components Industries, LLC (SCILLC). SCILLC reserves the right to make changes without further notice to any products herein. SCILLC makes no warranty, representation or guarantee regarding the suitability of its products for any particular purpose, nor does SCILLC assume any liability arising out of the application or use of any product or circuit, and specifically disclaims any and all liability, including without limitation special, consequential or incidental damages. “Typical” parameters which may be provided in SCILLC data sheets and/or specifications can and do vary in different applications and actual performance may vary over time. All operating parameters, including “Typicals” must be validated for each customer application by customer’s technical experts. SCILLC does not convey any license under its patent rights nor the rights of others. SCILLC products are not designed, intended, or authorized for use as components in systems intended for surgical implant into the body, or other applications intended to support or sustain life, or for any other application in which the failure of the SCILLC product could create a situation where personal injury or death may occur. Should Buyer purchase or use SCILLC products for any such unintended or unauthorized application, Buyer shall indemnify and hold SCILLC and its officers, employees, subsidiaries, affiliates, and distributors harmless against all claims, costs, damages, and expenses, and reasonable attorney fees arising out of, directly or indirectly, any claim of personal injury or death associated with such unintended or unauthorized use, even if such claim alleges that SCILLC was negligent regarding the design or manufacture of the part. SCILLC is an Equal Opportunity/Affirmative Action Employer. This literature is subject to all applicable copyright laws and is not for resale in any manner.

PUBLICATION ORDERING INFORMATION

LITERATURE FULFILLMENT:
Literature Distribution Center for ON Semiconductor
P.O. Box 61312, Phoenix, Arizona 85082−1312 USA
Phone: 480−829−7710 or 800−344−3860 Toll Free USA/Canada
Fax: 480−829−7709 or 800−344−3867 Toll Free USA/Canada
Email: orderlit@onsemi.com

N. American Technical Support: 800−282−9855 Toll Free USA/Canada

Japan: ON Semiconductor, Japan Customer Focus Center
2−9−1 Kamimeguro, Meguro−ku, Tokyo, Japan 153−0051
Phone: 81−3−5773−3850

ON Semiconductor Website: http://onsemi.com

Order Literature: http://www.onsemi.com/litorder

For additional information, please contact your local Sales Representative.

BC517/D