SIEMENS

Silicon Variable Capacitance Diode — BB 811

- Frequency range up to 2 GHz;
  special design for use in TV-sat indoor units

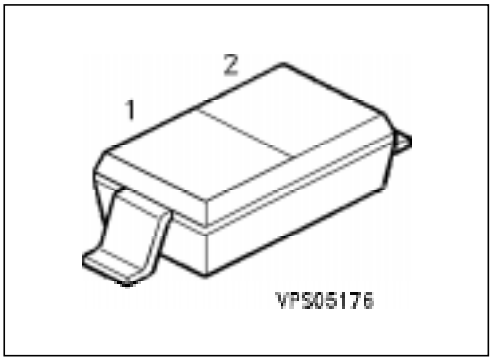

Type	Marking	Ordering Code (tape and reel)	Pin Configuration	Package[1)]
BB 811	white T	Q62702-B478		SOD-123

Maximum Ratings

Parameter	Symbol	Values	Unit
Reverse voltage	V_R	30	V
Forward current, $T_A \leq 60$ °C	I_F	20	mA
Operating temperature range	T_{op}	– 55 … + 125	°C
Storage temperature range	T_{stg}	– 55 … + 150	

Thermal Resistance

Junction - ambient	$R_{th\ JA}$	≤ 450	K/W

1) For detailed information see chapter Package Outlines.

Electrical Characteristics
at T_A = 25 °C, unless otherwise specified.

Parameter	Symbol	Values			Unit
		min.	typ.	max.	
Reverse current V_R = 30 V V_R = 30 V, T_A = 85 °C	I_R	 – –	 – –	 20 500	nA
Diode capacitance, f = 1 MHz V_R = 1 V V_R = 28 V	C_T	 7.8 0.85	 8.8 1.02	 9.8 1.2	pF
Capacitance ratio f = 1 MHz, V_R = 1 V/28 V	$\frac{C_{T1}}{C_{T28}}$	7.8	8.6	9.5	–
Series resistance f= 100 MHz, C_T = 9 pF	r_S	–	1	–	Ω
Case capacitance f= 1 MHz	C_C	–	0.1	–	pF
Capacitance matching f= 1 MHz, V_R = 0.5 … 28 V	$\frac{\Delta C_T}{G}$	–	–	3	%
Series inductance	L_S	–	2.8	–	nH

Diode capacitance $C_T = f(V_R)$
f= 1 MHz

