Rev	AWO #	Description	Date	Appr
-		RELEASED	8/21/09	

APPROVED: _____

DATE: _____ TITLE: _____

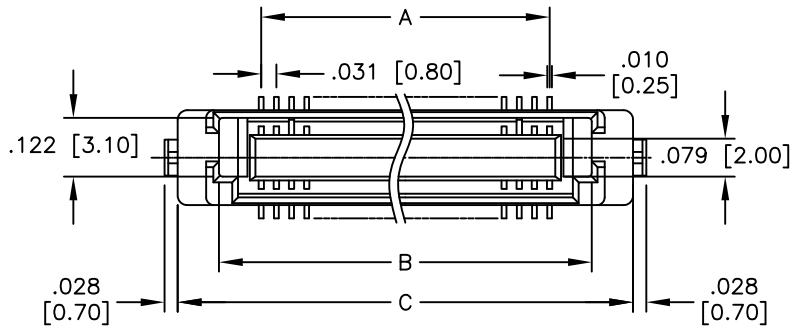

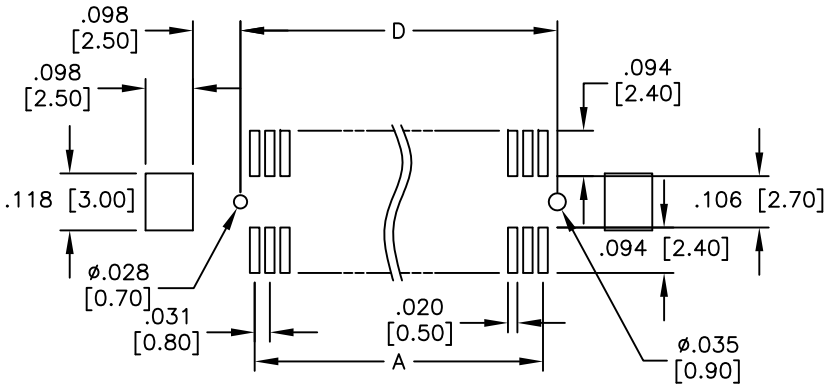

RECOMMENDED PCB LAYOUT

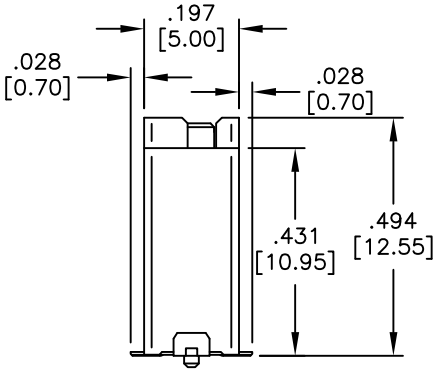

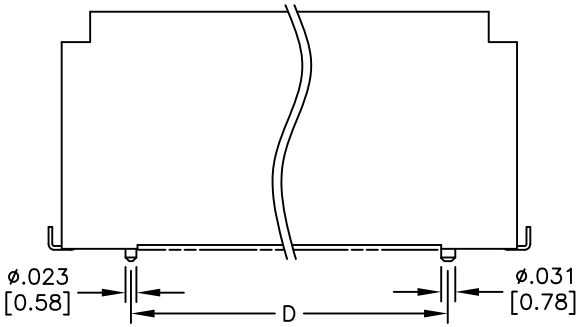

Positions: 20, 30, 40, 50, 60
A = .031 [0.80] x (No. of Contacts – 1)
B = .031 [0.80] x (No. of Contacts – 1) + .175 [4.45]
C = .031 [0.80] x (No. of Contacts – 1) + .346 [8.80]
D = .031 [0.80] x (No. of Contacts – 1) + .059 [1.50]

SPECIFICATIONS:
Material:
Insulator: Hi–temp thermoplastic, rated UL 94V–0
Insulator color: Black
Contacts: Copper Alloy
Hold down: Copper Alloy
Plating:
Gold flash over Nickel underplate on contact area,
Tin over Copper underplate on tails.
Electrical:
Operating voltage: 200 VAC max
Current rating: 0.5 Amps max
Contact resistance: 70 mohms max. initial
Insulation resistance: 100 Mohms min
Environmental:
Lead free, RoHS compliant
Recommended soldering temp: 260°C for 5 seconds

RoHS COMPLIANT

UNLESS OTHERWISE SPECIFIED
ALL DIMENSIONS ARE INCHES [MM]
TOLERANCES: EXCEPT AS NOTED

INCHES		HOLES	
.X	± .10	Ø.X	±.10
.XX	± .020	Ø.XX	±.015
.XXX	± .015	Ø.XXX	±.010

APPROVALS		DATE
DRAWN	DY	8/21/09
CHECKED		
APPROVED		

ADAM TECH
909 Rahway Avenue, Union, NJ 07083
Phone: 908-687-5000 Fax: 908-687-5710

TITLE
.031 [0.80] BOARD TO BOARD SOCKET
12.55 MM HEIGHT, SMT TYPE

SIZE	PART NO.	REV.
X	BB5-S6-XX-SG	-

REF: S00128T | SCALE: NTS | SHEET 1 OF 1