BAT54W / AW / CW / SW

200mA Surface Mount Small Signal Diodes

■ Features

- Low current rectification and high speed switching.
- Small surface mount type.
- Up to 200mA current capability.
- Low forward voltage drop (VF = 1.00V typ. @100mA).
- Silicon epitaxial planar chip, metal silicon junction.
- High speed (trr < 5 ns)
- Suffix "G" indicates Halogen-free part, ex.BAT54WG.
- Lead-free parts for green partner, exceeds environmental standards of MIL-STD-19500 /228.

■ Mechanical data

- Epoxy:UL94-V0 rated flame retardant
- Case : Molded plastic, SOT-323
- Terminals : Solder plated, solderable per MIL-STD-750, Method 2026
- Mounting Position : Any
- Weight : Approximated 0.006 gram

■ Outline

SOT-323

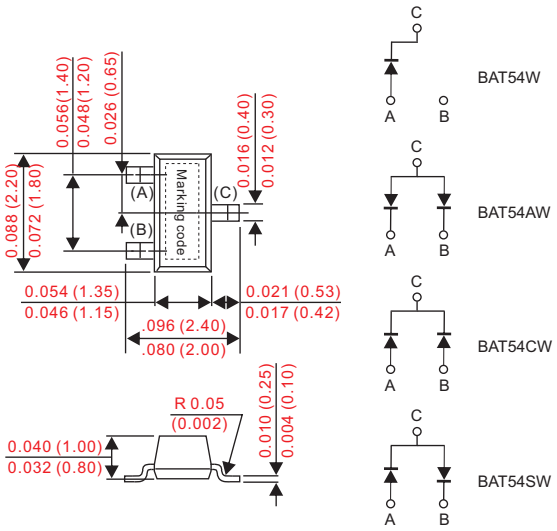

Dimensions in inches and (millimeters)

■ Maximum ratings and electrical characteristics

Rating at 25°C ambient temperature unless otherwise specified. Single phase, half wave, 60Hz, resistive or inductive load.
For capacitive load, derate current by 20%.

Characteristic	Symbol	BAT54W	BAT54AW	BAT54CW	BAT54SW	UNIT
Marking code		B4, KL5	B7, KL6	L3, KL7, 5C	B8, KL8	
Reverse Voltage	V_R	30				V
Forward Power Dissipation(1) TA = 25°C	P_F	200				mW
Derate above 25°C		2.0				mW/°C
Forward Current(DC)	I_F	200				mA
Junction Temperature	T_J	+125				°C
Storage Temperature	T_{STG}	-55 ~ +150				°C

Characteristic		Symbol	MIN.	TYP.	MAX.	UNIT
Reverse Breakdown Voltage	$I_{(BR)}$ = 10uAdc	$V_{(BR)}$	30			Vdc
Reverse Voltage Leakage Current	V_R = 25Vdc	I_R		0.5	2.0	uAdc
Total Capacitance	V_R = 1.0, f = 1.0MHz	C_T		7.6	10	pF
Forward Voltage	I_F = 0.1mAdc	V_F		220	240	mVdc
	I_F = 1.0mAdc			290	320	
	I_F = 10mAdc			350	400	
	I_F = 30mAdc			410	500	
	I_F = 100mAdc			520	1000	
Reverse Recovery Time	$I_F = I_R$ = 10mAdc, V_R = 5.0Vdc, $I_{R(REC)}$ = 1.0mAdc, R_L = 100Ω	trr			5.0	nS
Forward Current(DC)		I_F			200	mAdc
Repetitive Peak Forward Current		I_{FRM}			300	mAdc
Non-Repetitive Peak Forward Current	t < 1.0s	I_{FSM}			600	mAdc

1. FR-5 = 1.0 x 0.75 x 0.062 in.

Document ID : DS-22K1J
Issued Date : 2010/05/05
Revised Date : 2012/05/31
Revision : C

■ Rating and characteristic curves

FIG.1-TYPICAL FORWARD CHARACTERISTICS

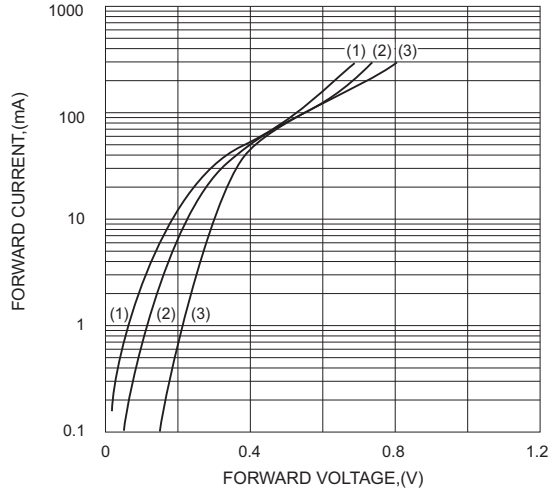

(1) T_A = 125 °C (2) T_A = 85 °C (3) T_A = 25 °C

FIG.2 - Leakage Current CHARACTERISTICS

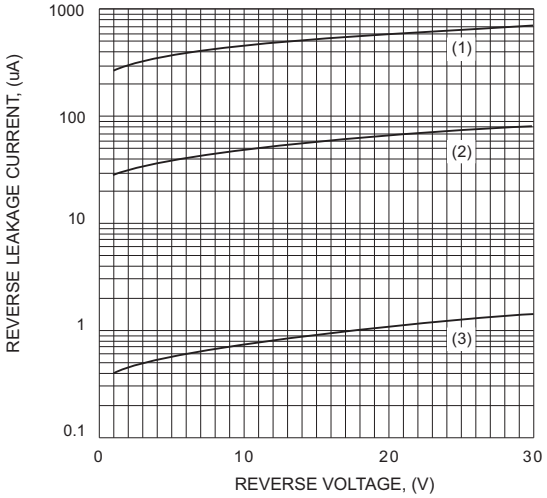

(1) T_A = 125 °C (2) T_A = 85 °C (3) T_A = 25 °C

FIG.3-TYPICAL JUNCTION CAPACITANCE

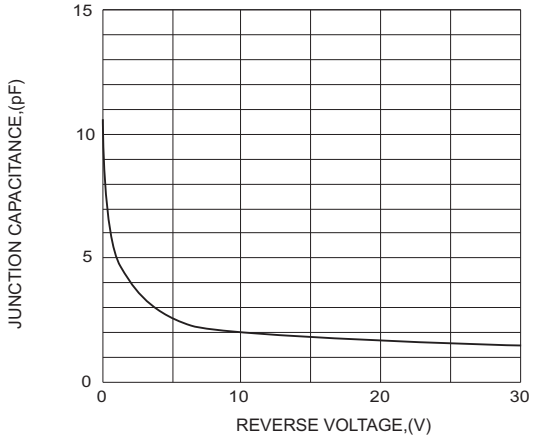

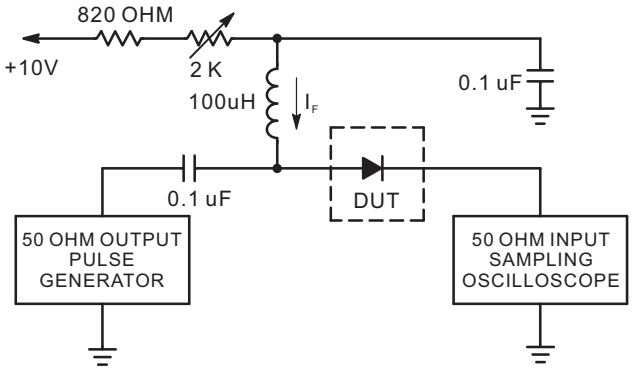

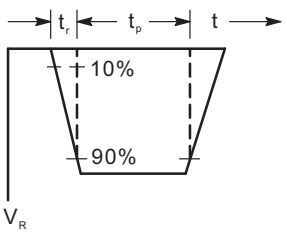

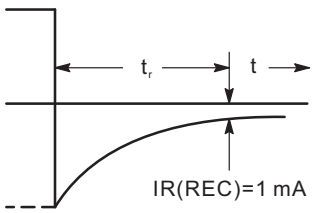

OUTPUT PULSE
(IF=IR=10mA;measured at iR(REC)=1mA)

Notes : 1. A2.0 Kohm variable resistor adjusted for a forward Current (IF) of 10mA.
2. Input pulse is adjusted so IR(peak) is equal to 10 mA.
3. tp >> trr.

Recovery Time Equivalent Test Circuit

Document ID : DS-22K1J
Issued Date : 2010/05/05
Revised Date : 2012/05/31
Revision : C

■ SOT-323 foot print

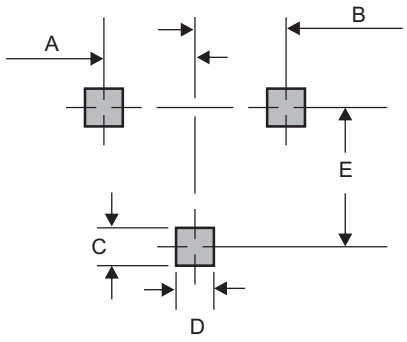

A	B	C	D	E
0.025 (0.65)	0.025 (0.65)	0.035 (0.90)	0.028 (0.70)	0.075 (1.90)

Dimensions in inches and (millimeters)

■ CITC reserves the right to make changes to this document and its products and specifications at any time without notice.

■ Customers should obtain and confirm the latest product information and specifications before final design, purchase or use.

■ CITC makes no warranty, representation or guarantee regarding the suitability of its products for any particular purpose, nor does CITC assume any liability for application assistance or customer product design.

■ CITC does not warrant or accept any liability with products which are purchased or used for any unintended or unauthorized application.

■ No license is granted by implication or otherwise under any intellectual property rights of CITC.

■ CITC products are not authorized for use as critical components in life support devices or systems without express written approval of CITC.

http://www.citcorp.com.tw/ Tel:886-3-5600628 Fax:886-3-5600636

Add:Rm. 3, 2F., No.32, Taiyuan St., Zhubei City, Hsinchu County 302, Taiwan (R.O.C.)

Document ID : DS-22K1J
Issued Date : 2010/05/05
Revised Date : 2012/05/31
Revision : C