BAS521WT

High Voltage Switching Diode

Applications

- high speed switching
- high voltage switching

PINNING

PIN	DESCRIPTION
1	Cathode
2	Anode

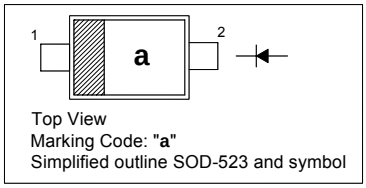

Top View
Marking Code: "**a**"
Simplified outline SOD-523 and symbol

Absolute Maximum Ratings (T_a = 25 °C)

Parameter	Symbol	Value	Unit
Repetitive Peak Reverse Voltage	V_{RRM}	300	V
Reverse Voltage	V_R	300	V
Continuous Forward Current	I_F	225	mA
Repetitive Peak Forward Current	I_{FRM}	625	mA
Non-Repetitive Peak Forward Current (1 µs)	I_{FSM}	4	A
Power Dissipation	P_{tot}	250	mW
Junction Temperature	T_J	150	°C
Storage Temperature Range	T_s	- 65 to + 150	°C

Characteristics at T_a = 25 °C

Parameter	Symbol	Min.	Max.	Unit
Forward Voltage at I_F = 100 mA	V_F	-	1.1	V
Reverse Breakdown Voltage at I_R = 100 µA	$V_{(BR)R}$	300	-	V
Reverse Current at V_R = 250 V	I_R	-	150	nA
Reverse Recovery Time at I_F = I_R = 30 mA, R_L = 100 Ω, i_{rr} = 0.1 I_R	t_{rr}	-	50	ns
Total Capacitance at V_R = 0 V, f = 1 MHz	C_T	-	5	pF

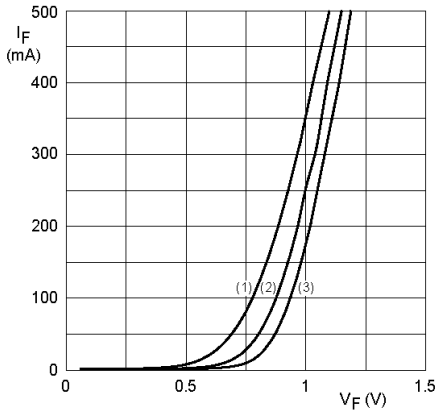

(1) T_{amb} = 150 °C.
(2) T_{amb} = 75 °C.
(3) T_{amb} =25 °C.

Forward current as a function of forward voltage; typical values.

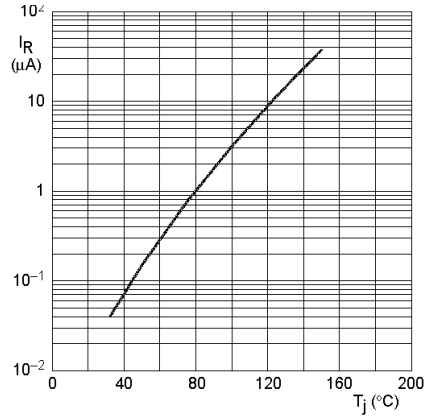

$V_R = V_{Rmax}$; typical values.

Reverse current as a function of junction temperature.

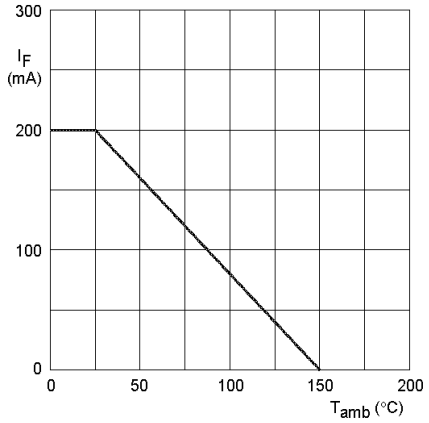

Maximum permissible continuous forward current as a function of ambient temperature.

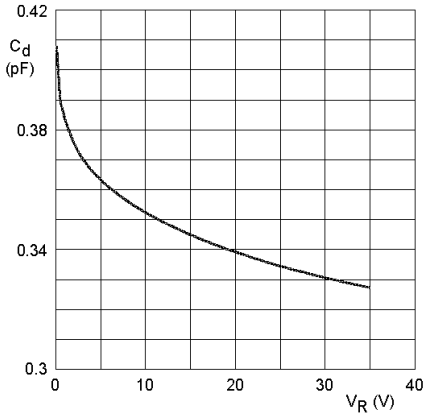

Diode capacitance as a function of reverse voltage; typical values.

PACKAGE OUTLINE

Plastic surface mounted package; 2 leads **SOD-523**

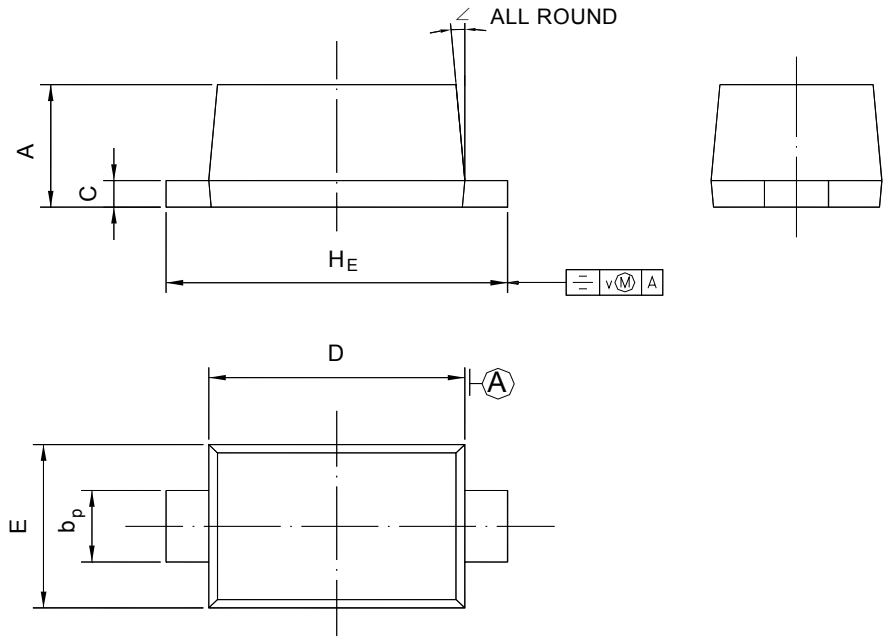

UNIT	A	b_p	C	D	E	H_E	V	∠
mm	0.70 0.60	0.4 0.3	0.135 0.127	1.25 1.15	0.85 0.75	1.7 1.5	0.1	5°