JIANGSU CHANGJIANG ELECTRONICS TECHNOLOGY CO., LTD

SOD-323 Plastic-Encapsulate Diode

BAS40WS **SCHOTTKY DIODE**

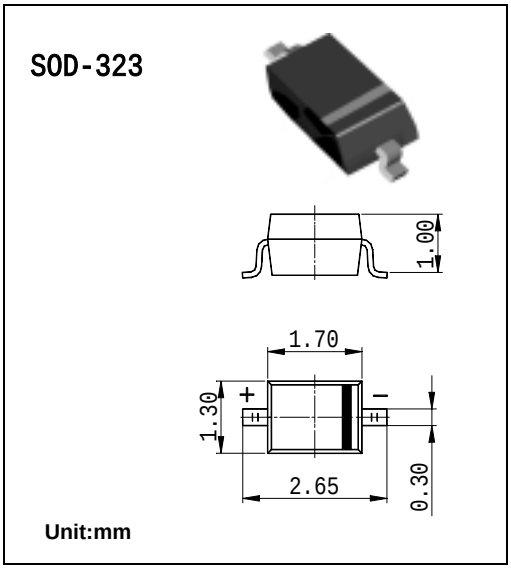

Features

- Low Turn-on Voltage
- Fast Switching
- PN Junction Guard Ring for Transient and ESD Protection

Marking:

BAS40WS:43

Maximum Ratings @ T_A = 25°C unless otherwise specified

Characteristic	Symbol	BAS40	Unit
Peak Repetitive Reverse Voltage Working Peak Reverse Voltage DC Blocking Voltage	V_{RRM} V_{RWM} V_R	40	V
Forward Continuous Current (Note 1)	I_{FM}	200	mA
Power Dissipation (Note 1)	P_d	350	mW
Forward Surge Current (Note 1) @ t < 1.0s	I_{FSM}	600	mA
Thermal Resistance, Junction to Ambient Air (Note 1)	$R_{\theta JA}$	357	°C/W
Operating Junction Temperature Range	T_j	-55 to +125	°C
Storage Temperature Range	T_{STG}	-65 to +150	°C

Electrical Characteristics @ T_A = 25°C unless otherwise specified

Characteristic	Symbol	Min	Typ	Max	Unit	Test Condition
Reverse Breakdown Voltage	$V_{(BR)R}$	40	—	—	V	I_R= 10μA
Forward Voltage	V_F	—	—	380 1000	mV	t_p < 300μs, I_F = 1.0mA t_p < 300μs, I_F = 40mA
Reverse Leakage Current	I_R	—	20	200	nA	t_p < 300μs, V_R = 30V
Junction Capacitance	C_j	—	4.0	5.0	pF	V_R = 0V, f =1.0MHz
Reverse Recovery Time	t_{rr}	—	—	5.0	ns	I_F = I_R = 10mA to I_R = 1.0mA, R_L = 100Ω

Notes: 1. Valid Provided that terminals are kept at ambient temperature.

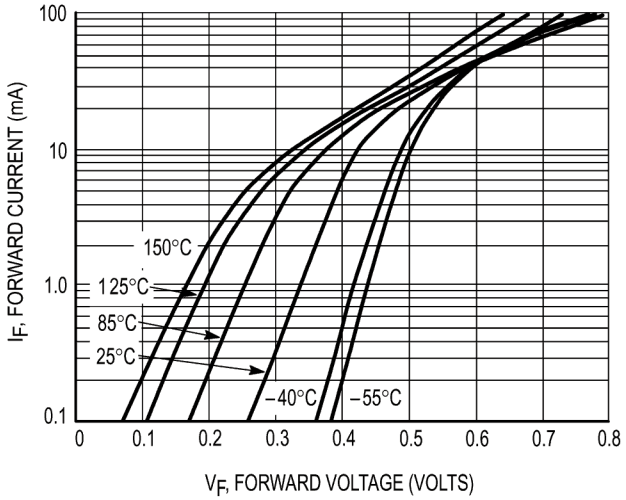
100
10
1.0
0.1
I_F, FORWARD CURRENT (mA)
150°C
125°C
85°C
25°C
−40°C
−55°C
0
0.1
0.2
0.3
0.4
0.5
0.6
0.7
0.8
V_F, FORWARD VOLTAGE (VOLTS)

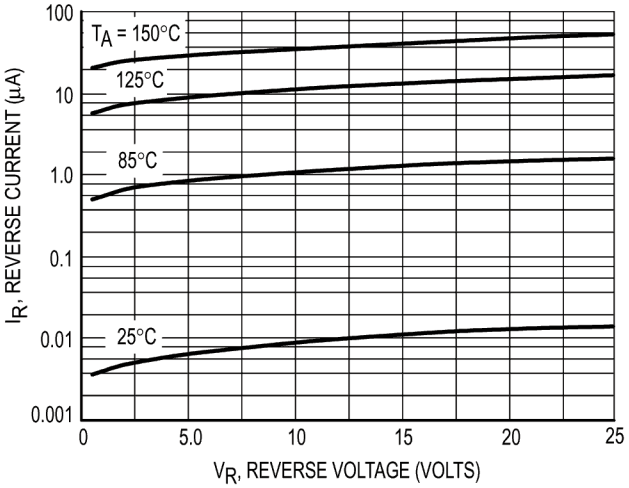
100
10
1.0
0.1
0.01
0.001
I_R, REVERSE CURRENT (μA)
T_A = 150°C
125°C
85°C
25°C
0
5.0
10
15
20
25
V_R, REVERSE VOLTAGE (VOLTS)

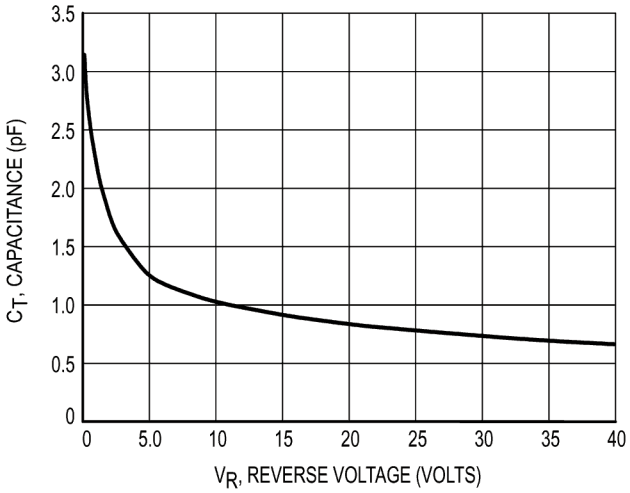
3.5
3.0
2.5
2.0
1.5
1.0
0.5
0
C_T, CAPACITANCE (pF)
0
5.0
10
15
20
25
30
35
40
V_R, REVERSE VOLTAGE (VOLTS)

SOD-323 PACKAGE OUTLINE DIMENSIONS

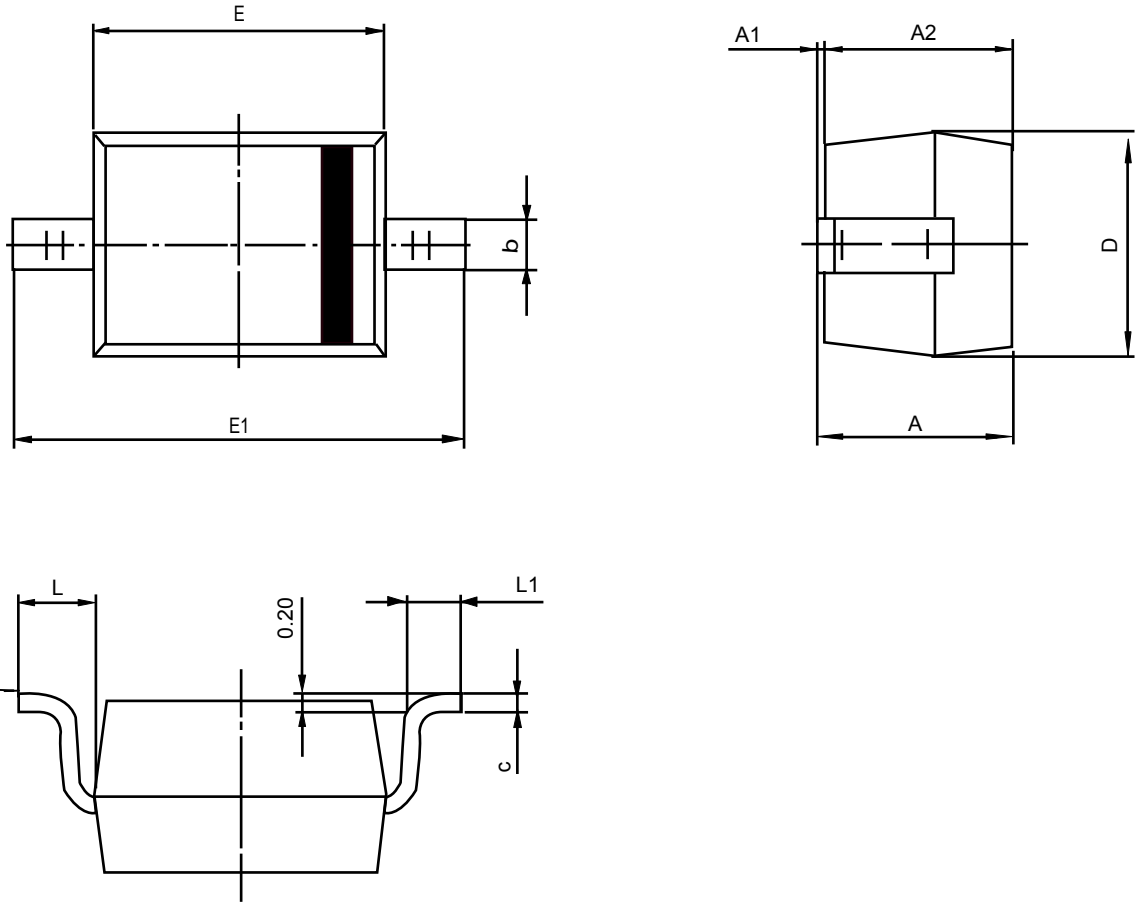

Symbol	Dimensions In Millimeters		Dimensions In Inches	
	Min	Max	Min	Max
A	1.050	1.250	0.041	0.049
A1	0.000	0.100	0.000	0.004
A2	1.050	1.150	0.041	0.045
b	0.200	0.400	0.008	0.016
c	0.080	0.150	0.003	0.006
D	1.200	1.400	0.047	0.055
E	1.600	1.800	0.063	0.071
E1	2.500	2.800	0.098	0.110
L	0.475REF		0.019REF	
L1	0.250	0.450	0.010	0.018
θ	0°	8°	0°	8°