

BAP64-02

Silicon PIN diode

Rev. 11 — 20 March 2019 Product data sheet

1 Product profile

1.1 General description

Planar PIN diode in a SOD523 ultra small plastic SMD package.

1.2 Features and benefits

- High voltage, current controlled
- RF resistor for RF attenuators and switches
- Low diode capacitance
- Low diode forward resistance
- Very low series inductance
- For applications up to 6 GHz
- AEC-Q101 qualified

1.3 Applications

- RF attenuators and switches

2 Pinning information

Table 1. Discrete pinning

Pin	Description		Simplified outline	Symbol
1	cathode	[1]		
2	anode			

[1] The marking bar indicates the cathode.

3 Ordering information

Table 2. Ordering information

Type number	Package		
	Name	Description	Version
BAP64-02	-	plastic surface-mounted package; 2 leads	SOD523

4 Marking

Table 3. Marking

Type number	Marking code
BAP64-02	S

5 Limiting values

Table 4. Limiting values

In accordance with the Absolute Maximum Rating System (IEC 60134).

Symbol	Parameter	Conditions		Min	Max	Unit
V_R	reverse voltage			-	175	V
I_F	forward current			-	100	mA
P_{tot}	total power dissipation	T_{sp} = 90 °C		-	715	mW
T_{stg}	storage temperature			-65	+150	°C
T_j	junction temperature			-65	+150	°C

6 Thermal characteristics

Table 5. Thermal characteristics

Symbol	Parameter	Conditions		Typ	Unit
$R_{th(j-sp)}$	thermal resistance from junction to solder point			85	K/W

7 Characteristics

Table 6. Characteristics

T_j = 25 °C unless otherwise specified.

Symbol	Parameter	Conditions		Min	Typ	Max	Unit
V_F	forward voltage	I_F = 50 mA		-	0.95	1.1	V
I_R	reverse current	V_R = 60 V		-	-	10	µA
		V_R = 20 V		-	-	1	µA
C_d	diode capacitance	see Figure 1; f = 1 MHz;					
		V_R = 0 V		-	0.48	-	pF
		V_R = 1 V		-	0.35	-	pF
		V_R = 20 V		-	0.23	0.35	pF
r_D	diode forward resistance	see Figure 2; f = 100 MHz;	[1]				
		I_F = 0.5 mA		-	20	40	Ω
		I_F = 1 mA		-	10	20	Ω
		I_F = 10 mA		-	2.0	3.8	Ω
		I_F = 100 mA		-	0.7	1.35	Ω

All information provided in this document is subject to legal disclaimers.

© NXP B.V. 2019. All rights reserved.

Symbol	Parameter	Conditions		Min	Typ	Max	Unit
τ_L	charge carrier life time	when switched from I_F = 10 mA to I_R = 6 mA; R_L = 100 Ω; measured at I_R = 3 mA		-	1.55	-	µs
L_S	series inductance			-	0.6	-	nH

[1] Guaranteed on AQL basis: inspection level S4, AQL 1.0.

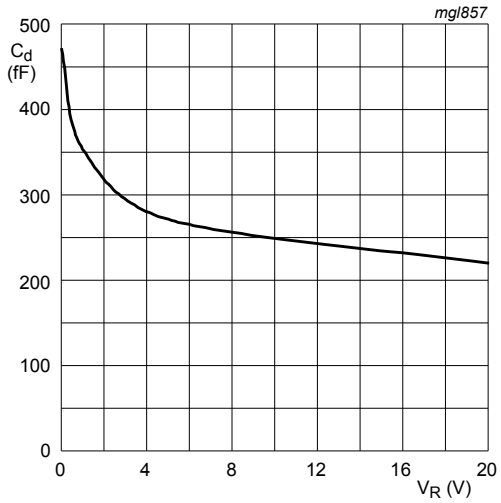

f = 1 MHz; T_j = 25 °C.

Figure 1. Diode capacitance as a function of reverse voltage; typical values

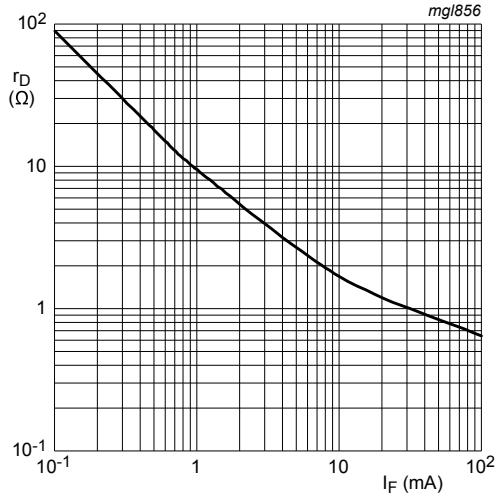

f = 100 MHz; T_j = 25 °C.

Figure 2. Forward resistance as a function of forward current; typical values

All information provided in this document is subject to legal disclaimers.

© NXP B.V. 2019. All rights reserved.

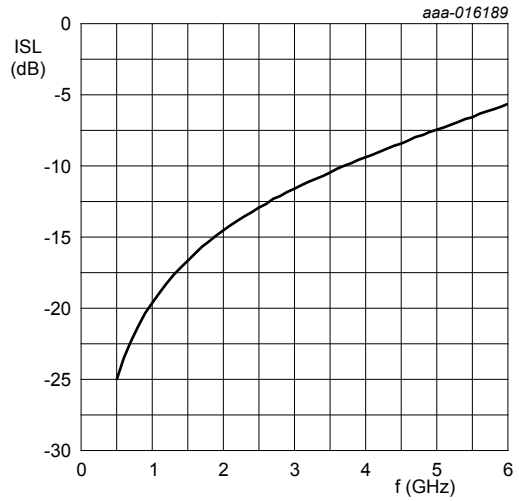

T_{amb} = 25 °C

Diode zero biased and inserted in series with a 50 Ω stripline circuit

Figure 3. Isolation of the diode as a function of frequency; typical values

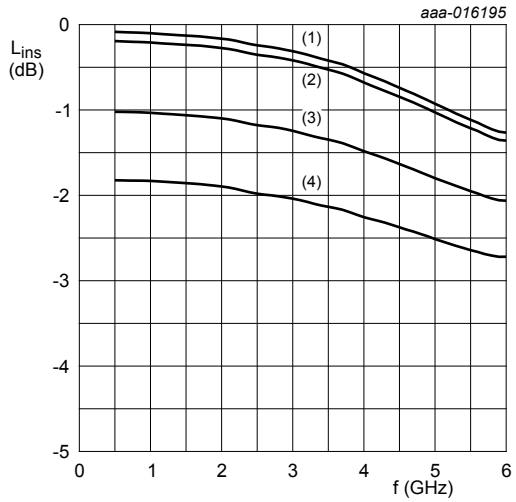

T_{amb} = 25 °C

1. I_F = 100 mA
2. I_F = 10 mA
3. I_F = 1 mA
4. I_F = 0.5 mA

Diode inserted in series with a 50 Ω stripline circuit and biased via the analyzer Tee network

Figure 4. Insertion loss of the diode as a function of frequency; typical values

All information provided in this document is subject to legal disclaimers.

© NXP B.V. 2019. All rights reserved.

8 Package outline

Plastic surface-mounted package; 2 leads **SOD523**

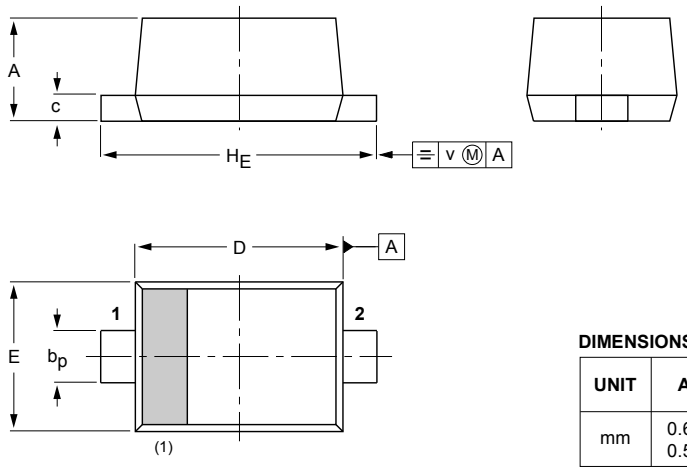

DIMENSIONS (mm are the original dimensions)

UNIT	A	b_p	c	D	E	H_E	v
mm	0.65 0.58	0.34 0.26	0.17 0.11	1.25 1.15	0.85 0.75	1.65 1.55	0.1

Note

1. The marking bar indicates the cathode.

OUTLINE VERSION	REFERENCES				EUROPEAN PROJECTION	ISSUE DATE
	IEC	JEDEC	JEITA			
SOD523			SC-79			~~02-12-13~~ 06-03-16

Figure 5. Package outline SOD523

9 Abbreviations

Table 7. Abbreviations

Acronym	Description
AQL	acceptable quality level
PIN	P-type, intrinsic, N-type
SMD	surface mounted device
S4	special inspection level 4

10 Revision history

Table 8. Revision history

Document ID	Release date	Data sheet status	Change notice	Supersedes
BAP64-02 v.11	20190311	Product data sheet	-	BAP64-02 v.10
Modifications:	• changed V_R condition of I_R from 175 V to 60 V			
BAP64-02 v.10	20150512	Product data sheet	-	BAP64-02 v.9
Modifications:	• AEC-Q101 qualified			
BAP64-02 v.9	20141215	Product data sheet	-	BAP64-02 v.8

All information provided in this document is subject to legal disclaimers.

© NXP B.V. 2019. All rights reserved.

Document ID	Release date	Data sheet status	Change notice	Supersedes
BAP64-02 v.8	20140428	Product data sheet	-	BAP64-02 v.7
BAP64-02 v.7	20140211	Product data sheet	-	BAP64-02_N v.6
BAP64-02_N v.6	20080109	Product data sheet	-	BAP64-02 v.5
BAP64-02 v.5 (9397 750 06912)	20000323	Product specification	-	BAP64-02 v.4
BAP64-02 v.4 (9397 750 06418)	19990921	Preliminary specification	-	BAP64-02_N v.3
BAP64-02_N v.3 (9397 750 06086)	19990616	Preliminary specification	-	BAP64-02 v.2
BAP64-02 v.2 (9397 750 05556)	19990510	Objective specification	-	BAP64-02_N v.1
BAP64-02_N v.1 (9397 750 05492)	19981204	Objective specification	-	-

All information provided in this document is subject to legal disclaimers.

© NXP B.V. 2019. All rights reserved.

11 Legal information

11.1 Data sheet status

Document status[1][2]	Product status[3]	Definition
Objective [short] data sheet	Development	This document contains data from the objective specification for product development.
Preliminary [short] data sheet	Qualification	This document contains data from the preliminary specification.
Product [short] data sheet	Production	This document contains the product specification.

[1] Please consult the most recently issued document before initiating or completing a design.
[2] The term 'short data sheet' is explained in section "Definitions".
[3] The product status of device(s) described in this document may have changed since this document was published and may differ in case of multiple devices. The latest product status information is available on the Internet at URL http://www.nxp.com.

11.2 Definitions

Draft — The document is a draft version only. The content is still under internal review and subject to formal approval, which may result in modifications or additions. NXP Semiconductors does not give any representations or warranties as to the accuracy or completeness of information included herein and shall have no liability for the consequences of use of such information.

Short data sheet — A short data sheet is an extract from a full data sheet with the same product type number(s) and title. A short data sheet is intended for quick reference only and should not be relied upon to contain detailed and full information. For detailed and full information see the relevant full data sheet, which is available on request via the local NXP Semiconductors sales office. In case of any inconsistency or conflict with the short data sheet, the full data sheet shall prevail.

Product specification — The information and data provided in a Product data sheet shall define the specification of the product as agreed between NXP Semiconductors and its customer, unless NXP Semiconductors and customer have explicitly agreed otherwise in writing. In no event however, shall an agreement be valid in which the NXP Semiconductors product is deemed to offer functions and qualities beyond those described in the Product data sheet.

11.3 Disclaimers

Limited warranty and liability — Information in this document is believed to be accurate and reliable. However, NXP Semiconductors does not give any representations or warranties, expressed or implied, as to the accuracy or completeness of such information and shall have no liability for the consequences of use of such information. NXP Semiconductors takes no responsibility for the content in this document if provided by an information source outside of NXP Semiconductors. In no event shall NXP Semiconductors be liable for any indirect, incidental, punitive, special or consequential damages (including - without limitation - lost profits, lost savings, business interruption, costs related to the removal or replacement of any products or rework charges) whether or not such damages are based on tort (including negligence), warranty, breach of contract or any other legal theory. Notwithstanding any damages that customer might incur for any reason whatsoever, NXP Semiconductors' aggregate and cumulative liability towards customer for the products described herein shall be limited in accordance with the Terms and conditions of commercial sale of NXP Semiconductors.

Right to make changes — NXP Semiconductors reserves the right to make changes to information published in this document, including without limitation specifications and product descriptions, at any time and without notice. This document supersedes and replaces all information supplied prior to the publication hereof.

Applications — Applications that are described herein for any of these products are for illustrative purposes only. NXP Semiconductors makes no representation or warranty that such applications will be suitable for the specified use without further testing or modification. Customers are responsible for the design and operation of their applications and products using NXP Semiconductors products, and NXP Semiconductors accepts no liability for any assistance with applications or customer product design. It is customer's sole responsibility to determine whether the NXP Semiconductors product is suitable and fit for the customer's applications and products planned, as well as for the planned application and use of customer's third party customer(s). Customers should provide appropriate design and operating safeguards to minimize the risks associated with their applications and products. NXP Semiconductors does not accept any liability related to any default, damage, costs or problem which is based on any weakness or default in the customer's applications or products, or the application or use by customer's third party customer(s). Customer is responsible for doing all necessary testing for the customer's applications and products using NXP Semiconductors products in order to avoid a default of the applications and the products or of the application or use by customer's third party customer(s). NXP does not accept any liability in this respect.

Limiting values — Stress above one or more limiting values (as defined in the Absolute Maximum Ratings System of IEC 60134) will cause permanent damage to the device. Limiting values are stress ratings only and (proper) operation of the device at these or any other conditions above those given in the Recommended operating conditions section (if present) or the Characteristics sections of this document is not warranted. Constant or repeated exposure to limiting values will permanently and irreversibly affect the quality and reliability of the device.

Terms and conditions of commercial sale — NXP Semiconductors products are sold subject to the general terms and conditions of commercial sale, as published at http://www.nxp.com/profile/terms, unless otherwise agreed in a valid written individual agreement. In case an individual agreement is concluded only the terms and conditions of the respective agreement shall apply. NXP Semiconductors hereby expressly objects to applying the customer's general terms and conditions with regard to the purchase of NXP Semiconductors products by customer.

No offer to sell or license — Nothing in this document may be interpreted or construed as an offer to sell products that is open for acceptance or the grant, conveyance or implication of any license under any copyrights, patents or other industrial or intellectual property rights.

Suitability for use in automotive applications — This NXP Semiconductors product has been qualified for use in automotive applications. Unless otherwise agreed in writing, the product is not designed, authorized or warranted to be suitable for use in life support, life-critical or safety-critical systems or equipment, nor in applications where failure or malfunction of an NXP Semiconductors product can reasonably be expected

All information provided in this document is subject to legal disclaimers.

© NXP B.V. 2019. All rights reserved.

to result in personal injury, death or severe property or environmental damage. NXP Semiconductors and its suppliers accept no liability for inclusion and/or use of NXP Semiconductors products in such equipment or applications and therefore such inclusion and/or use is at the customer's own risk.

Export control — This document as well as the item(s) described herein may be subject to export control regulations. Export might require a prior authorization from competent authorities.

Translations — A non-English (translated) version of a document is for reference only. The English version shall prevail in case of any discrepancy between the translated and English versions.

11.4 Trademarks

Notice: All referenced brands, product names, service names and trademarks are the property of their respective owners.

All information provided in this document is subject to legal disclaimers.

© NXP B.V. 2019. All rights reserved.

Contents

1 Product profile 1
1.1 General description 1
1.2 Features and benefits 1
1.3 Applications 1
2 Pinning information 1
3 Ordering information 1
4 Marking 2
5 Limiting values 2
6 Thermal characteristics 2
7 Characteristics 2
8 Package outline 5
9 Abbreviations 5
10 Revision history 5
11 Legal information 7

Please be aware that important notices concerning this document and the product(s) described herein, have been included in section 'Legal information'.

© NXP B.V. 2019. **All rights reserved.**

For more information, please visit: http://www.nxp.com
For sales office addresses, please send an email to: salesaddresses@nxp.com

Date of release: 20 March 2019
Document identifier: BAP64-02