Stepping motor driver
BA6846FS / BA6846FV

The BA6846FS and BA6846FV are stepping motor drivers with a maximum output current of 0.5A. The logic input allows three output modes : forward, reverse, and power save. The ICs have low output saturation voltage and are capable of driving motors at low supply voltage.

●Applications
Stepping motors for floppy disk drives

●Features
1) Low output saturation voltage.
2) Power save circuit.
3) Thermal shutdown circuit.

●Absolute maximum ratings (Ta = 25°C)

Parameter		Symbol	Limits	Unit
Applied voltage		V_{CC}	18	V
Power dissipation	BA6846FS	Pd	800*1	mW
	BA6846FV		500*2	
Operating temperature		Topr	−25～+75	℃
Storage temperature		Tstg	−55～+150	℃
Allowable output current		$I_{OMax.}$	500*3	mA

*1 When mounted on a glass epoxy PCB (90 X 50 X 1.6 mm).
Reduced by 6.4 mW for each increase in Ta of 1℃ over 25℃.
*2 When mounted on a glass epoxy PCB (90 X 50 X 1.6 mm).
Reduced by 4.0 mW for each increase in Ta of 1℃ over 25℃.
*3 Should not exceed Pd- or ASO-value.

●Recommended operating conditions (Ta = 25°C)

Parameter	Symbol	Limits	Unit
Power supply voltage	V_{CC}	2.7～9.0	V

●Block diagram

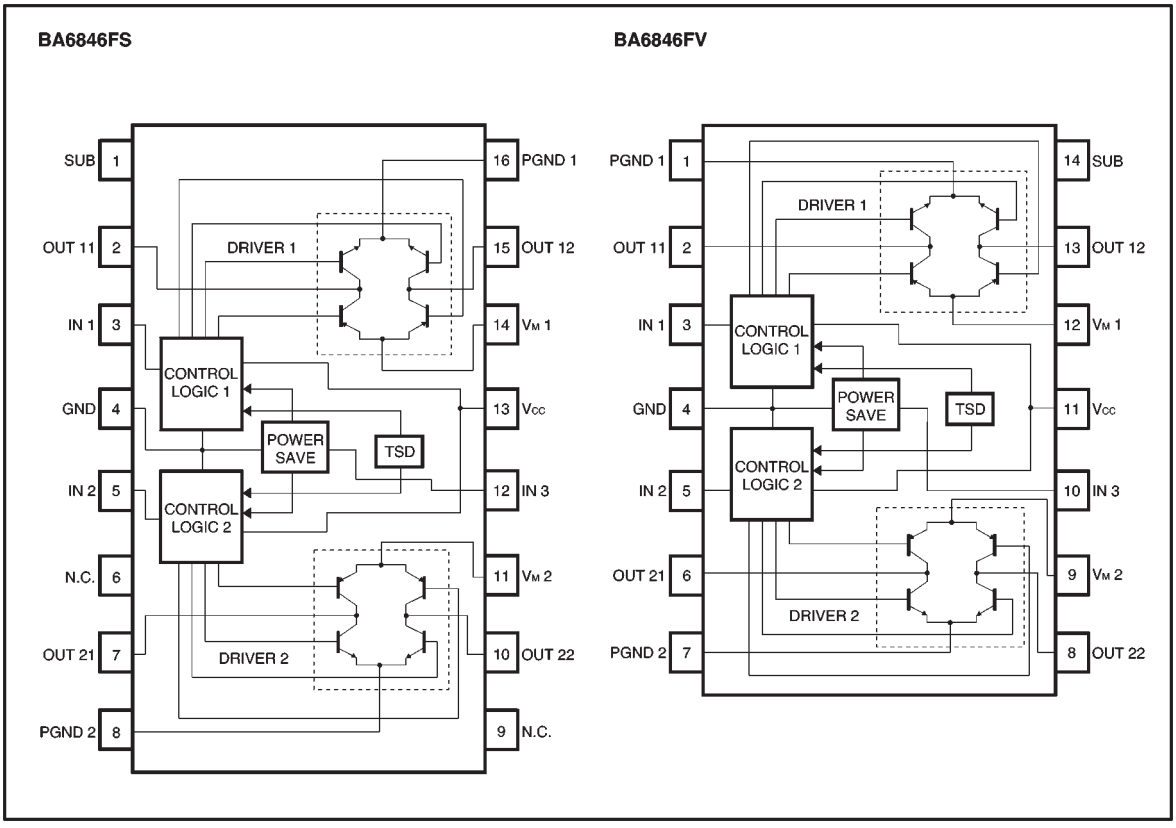

●Pin descriptions

BA6846FS	BA6846FV	Pin name	Function
16	1	PGND1	Motor ground
2	2	OUT11	Motor output
3	3	IN1	Logic input
4	4	GND	Ground
5	5	IN2	Logic input
7	6	OUT21	Motor output
8	7	PGND2	Motor ground
10	8	OUT22	Motor output
11	9	V_{M2}	Motor power supply
12	10	IN3	Logic input
13	11	V_{CC}	Power supply
14	12	V_{M1}	Motor power supply
15	13	OUT12	Motor output
1	14	SUB	SUB Ground

✻ The SUB pin should have the lowest potential (ground potential) in the IC.

●Input / output circuits

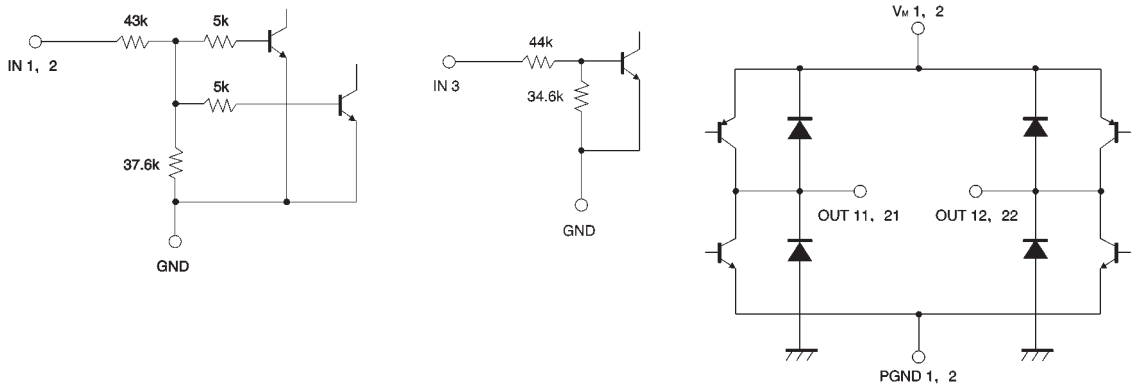

Fig.1 (Resistance, in Ω, is typical value)

●Electrical characteristics (unless otherwise noted, Ta = 25°C, V_{CC} = 5V, V_M1, 2 = 5V)

Parameter	Symbol	Min.	Typ.	Max.	Unit	Conditions
Supply current 1	I_{CC1}	—	7	13.5	mA	IN1=IN2=IN3=5V
Supply current 2	I_{CC2}	—	—	10	μA	IN1=IN2=IN3=0V
Input current	I_{IN}	—	30	54	μA	IN1=IN2=IN3=2V
Input low level voltage	V_{IL}	—	—	0.8	V	
Input high level voltage	V_{IH}	2.0	—	—	V	
Output saturation voltage	V_{sat}	—	0.8	1.2	V	I_{OUT}=400 mA, sum of the high- and low-side voltages

◎Not designed for radiation resistance

●Input / output truth table

IN1 / 2	IN3	OUT11 / 21	OUT12 / 22	Mode
L	H	H	L	Forward
H	H	L	H	Reverse
L	L	OPEN	OPEN	Stop
H	L	OPEN	OPEN	Stop

●Application example

BA6846FS

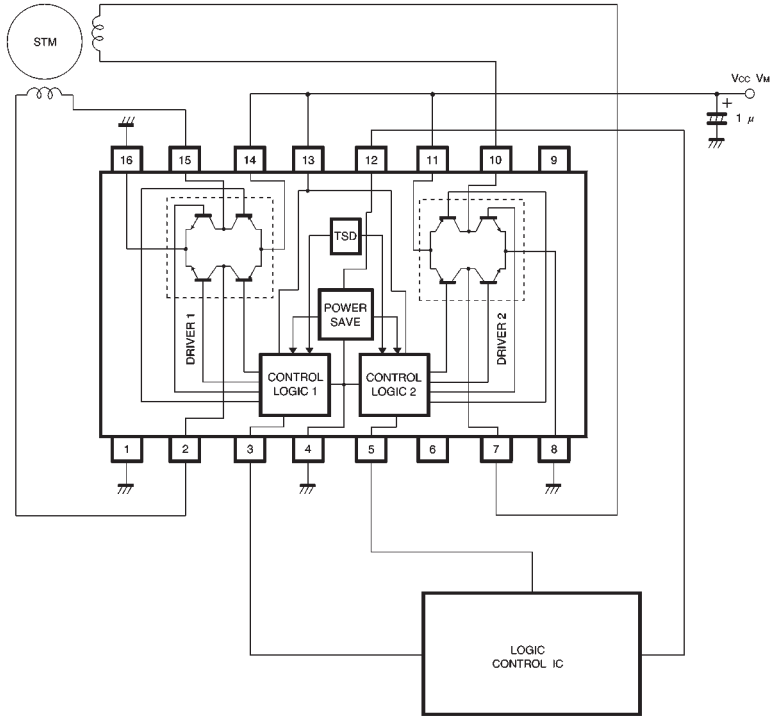

BA6846FV

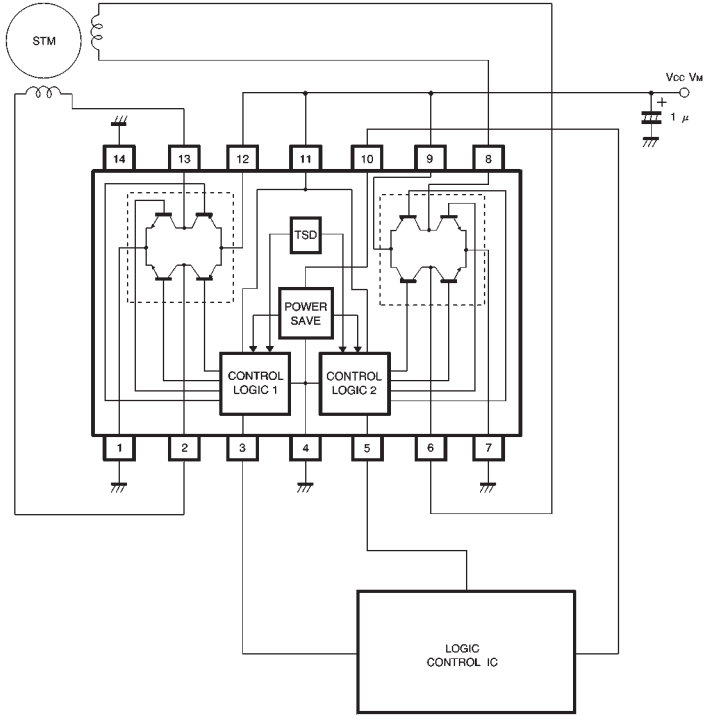

Fig.2

●Operation notes

(1) Control logic pins

Do not apply voltage to control logic pins when the V_{CC} voltage is not applied to the IC. The voltage of each pin should be less than V_{CC}, if applied, and should be more than the ground voltage.

(2) PCB arrangement

When changing the rotational direction of a motor, a large current of up to a few hundred milliamperes can flow between the motor power supply and the PGND pin. Depending on the application, this large output current may flow back to input pins, resulting in output oscillation or other malfunctions. Make sure that your design does not allow a common impedance between the large current output lines and the input section. Suppress the power supply impedance to low levels, otherwise output oscillation may occur.

(3) Package power dissipation

The power dissipated by the IC varies widely with the supply voltage and the output current. Give full consideration to the package power dissipation rating when setting the supply voltage and the output current.

(4) Ground pins

The GND and SUB pins should have the lowest potential (ground potential) in the IC.

(5) Thermal shutdown circuit

This circuit shuts down all the driver outputs when the chip junction temperature is increased to about 175°C (typical). The thermal shutdown circuit is deactivated when the temperature drops to about 20°C (typical).

(6) Logic input pins

These pins have characteristics negatively correlated to temperature. Give full consideration to the temperature effect when using the IC.

●Electrical characteristic curves

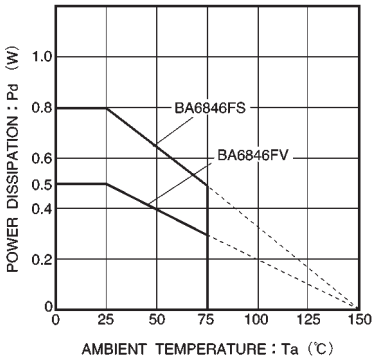

Fig.3 Power dissipation curve

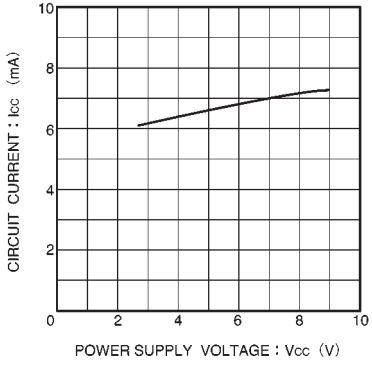

Fig.4 Circuit current vs. power supply voltage

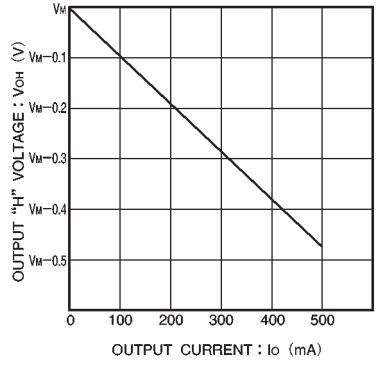

Fig.5 HIGH level output voltage vs. output current

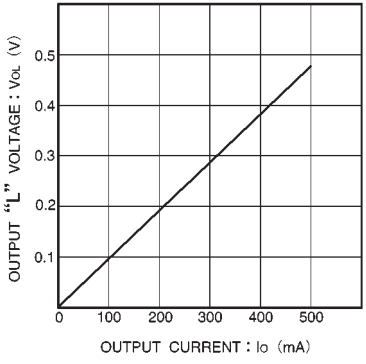

Fig.6 LOW level output voltage vs. output current

●External dimensions (Units: mm)

BA6846FV

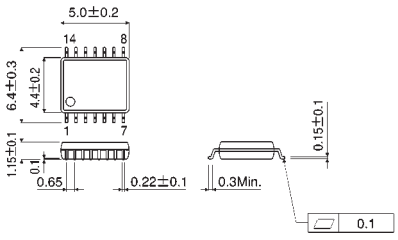

SSOP-B14

BA6846FS

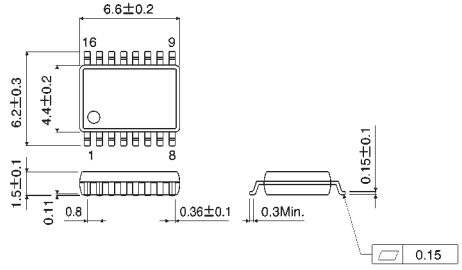

SSOP-A16