3-phase motor driver

BA6458FP-Y

The BA6458FP-Y is an one-chip IC designed for driving video cassette recorder cylinder motors. It is a high-performance IC with a 3-phase, full-wave, pseudo-linear drive system. The IC is compactly packaged.

●Applications

Video cassette recorder cylinder motors

●Features

1) 3-phase, full-wave, pseudo-linear drive system.
2) Output saturation voltage is low with low variation.
3) Built-in torque limit pin.
4) Contains two amplifiers and two hysteresis amplifiers to amplify FG and PG signals.
5) Built-in thermal shutdown circuit.

●Block diagram

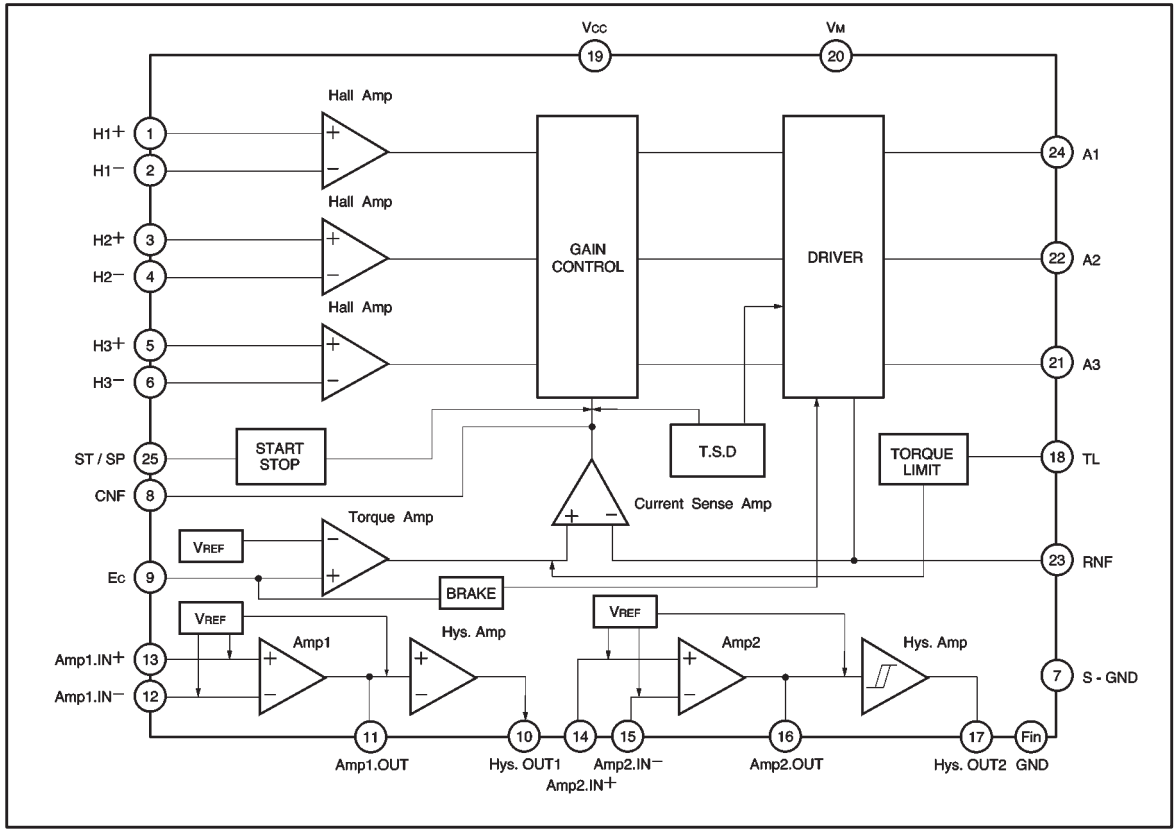

●Absolute maximum ratings (Ta=25°C)

Parameter	Symbol	Limits	Unit
Power supply voltage	V_{CC}	7	V
Power supply voltage	V_M	24	V
Power dissipation	Pd	1450*1	mW
Operating temperature	Topr	−20～+75	℃
Storage temperature	Tstg	−55～+150	℃
Output current	I_{OUT}	1300*2	mA

When mounted on a glass epoxy board (90×50×1.6 mm).
*1 Reduced by 11.6 mW for each increase in Ta of 1℃ over 25℃.
*2 Should not exceed Pd or ASO values.

●Recommended operating conditions (Ta=25°C)

Parameter	Symbol	Min.	Max.	Unit
Operating power supply voltage	V_{CC}	4.25	5.50	V
Operating power supply voltage	V_M	3.0	20	V

●Pin descriptions

Pin No.	Pin name	Function	Pin No.	Pin name	Function
1	$H1^+$	Hall signal input	14	Amp2 IN^+	Amplifier 2 input, non-inverted
2	$H1^-$	Hall signal input	15	Amp2 IN^-	Amplifier 2 input, inverted
3	$H2^+$	Hall signal input	16	Amp2 OUT	Amplifier 2 output
4	$H2^-$	Hall signal input	17	Hys. OUT2	Schmitt trigger amplifier 2 output
5	$H3^+$	Hall signal input	18	TL	Torque limit
6	$H3^-$	Hall signal input	19	V_{CC}	Power supply
7	S-GND	Signal ground	20	V_M	Motor power supply
8	CNF	Capacitor connection for phase compensation	21	A3	Output
9	E_C	Output current control	22	A2	Output
10	Hys. OUT1	Schmitt trigger amplifier 1 output	23	RNF	Output current sensing
11	Amp1 OUT	Output pin for amplifier 1 and schmitt trigger amplifier 1	24	A1	Output
12	Amp1 IN^-	Amplifier 1 input, inverted	25	ST / SP	Start/stop switching
13	Amp1 IN^+	Amplifier 1 input, non-inverted	FIN	FIN	Be sure to connect this radiation fin to the ground.

●Electrical characteristics (unless otherwise noted, Ta=25°C, V_{CC}=5V, V_M=12V)

Parameter	Symbol	Min.	Typ.	Max.	Unit	Conditions
Supply current	I_{CC}	—	8.5	13.0	mA	
〈MDA〉						
Hall input bias current	I_{BH}	—	0.5	5.0	μA	H^+=High, H^-=Low or H^-=High
Hall common-mode input voltage	V_{HB}	1.5	—	4.0	V	
Hall element minimum input level	V_{INH}	60	—	—	mV_{P-P}	
Torque control input voltage range	E_C	0	—	5.0	V	
Torque control voltage offset	E_{cofs}	−150	0	150	mV	For E_C = 2.3 V
Output idle voltage	E_{cidle}	—	0	10	mV	E_C=2V, R_{NF}=0.5Ω
Servo input current	E_{CIN}	—	1.0	5.0	μA	E_C=2.5V
Input / output gain	G_{EC}	0.420	0.510	0.600	A / V	Measured at E_C= 2.8 V, 3.3 V; R_{NF}= 0.5Ω
Start / stop ON voltage	$V_{S/S}$ ON	3.5	—	—	V	
Start / stop OFF voltage	$V_{S/S}$ OFF	—	—	1.2	V	
Output saturation high level voltage	V_{OH}	10.4	11.1	—	V	I_O=600mA
Output saturation low level voltage	V_{OL}	—	0.3	0.9	V	I_O=600mA
Output drive current capacity	I_O (Max.)	800	—	—	mA	R_{NF}=0.5Ω Tj=25℃ *
Torque limit current	I_{TL}	520	650	780	mA	TL=0.4V, R_{NF}=0.5Ω
〈Amp1, Amp2〉						
Input impedance	R_{BA}	14	20	26	kΩ	
Open loop gain	G_A	65	70	—	dB	f=500Hz
DC bias voltage	V_{BA}	2.20	2.45	2.70	V	
Output high level voltage	$V_{OH\,A}$	3.6	4.0	—	V	I_{OA}=0.5mA
Output low level voltage	$V_{OL\,A}$	—	0.9	1.3	V	I_{OA}=0.5mA
Input valtage of amplifiers 1 and 2	V_{AB}	1.2	—	4.0	V	
〈Schmitt trigger amplifiers〉						
Hysteresis width	V_{hys}	±112	±150	±188	mV	
DC bias voltage	V_{Bhys}	2.20	2.45	2.70	V	
Output low level voltage	V_{OLhys}	—	0.1	0.3	V	I_{OLhys}=2mA
Output pull-up resistance	R_{Bhys}	7.0	10.0	13.0	kΩ	

* Tj is chip junction temperature.

◎Not designed for radiation resistance.

●Circuit operation

(1) The 3-phase Hall signal is amplified in the hall amplifiers and sent to the matrix section, where the signal is further amplified and combined. After the signal is converted to a current in the amplitude control circuit, the current is supplied to the output driver, which then provides a motor drive current. The phases of the Hall input signal, output voltage, and output current are shown in Fig. 1.

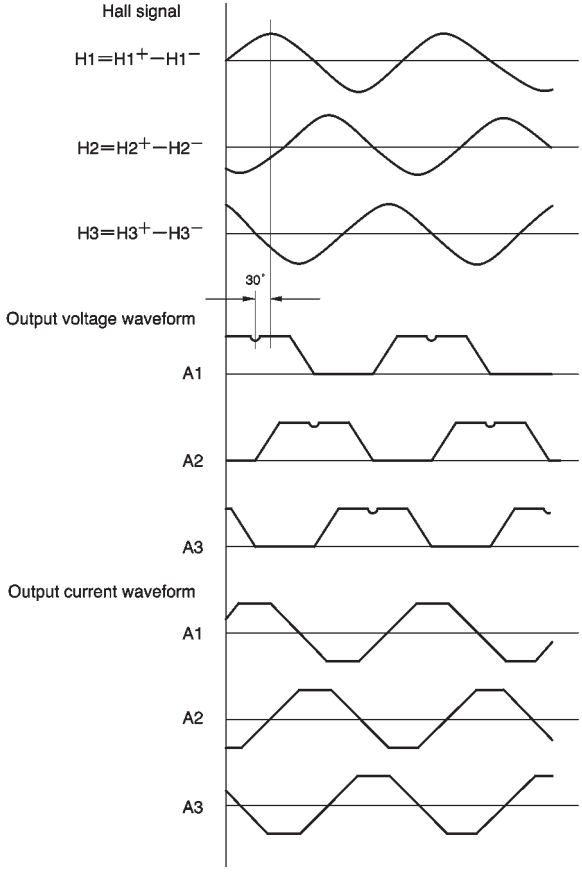

Fig. 1

(2) Torque control pin

The output current can be controlled by adjusting the voltage applied to the torque control pin (pin 9).

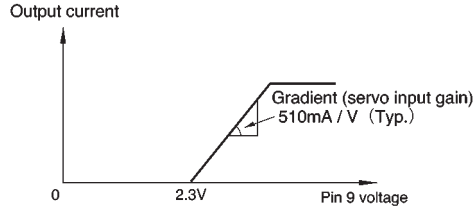

Fig. 2

(3) Start/stop pin

The motor is in the run mode when the pin input voltage is 3.5V or more and in the idle mode (all output transistors are off) when the voltage is 1.2V or less.

(4) Power ground pin (R_{NF} pin)

The R_{NF} pin is the output stage ground pin. Connect a resistor (0.5Ω recommended) between this pin and the ground to monitor the output current.

(5) Torque limit pin (TL pin)

The output current can be limited by applying a voltage to the torque limit pin. Control is provided so that this pin will have the same potential as the R_{NF} pin. Note that there is an offset in the TL-pin voltage.

(6) Phase compensation pin (C_{NF} pin)

Connect a capacitor between this pin and V_{CC} if the output tends to oscillate.

(7) Amplifiers 1 and 2

Amplifiers 1 and 2 have an open loop gain of about 70dB (typical). The input terminals are biased internally to 2.45V (typical).

(8) Hysteresis amplifiers

The hysteresis amplifiers have a hysteresis width of ±120mV (typical). The input terminals are biased internally.

●Operation notes

(1) Input/output circuit

1) Start/stop switching pin (25 pin)

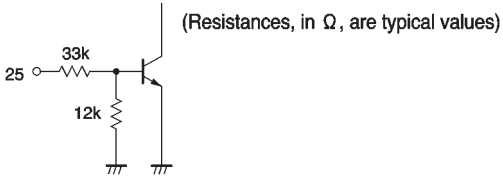

Fig.3

2) Torque limit pin (18 pin)

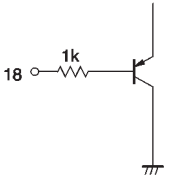

Fig.4

3) Torque control input (9 pin)

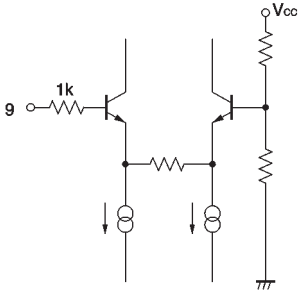

Fig.5

4) Driver output (A1: 24 pin, A2: 22 pin, A3: 21 pin)

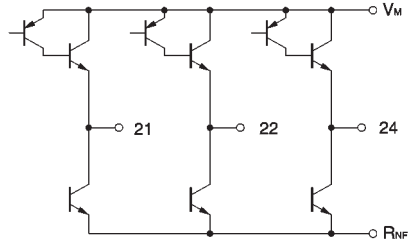

Fig.6

5) Hall input

($H1^+$: 1 pin, $H1^-$: 2 pin, $H2^+$: 3 pin, H2: 4 pin, $H3^+$: 5 pin, $H3^-$: 6 pin)

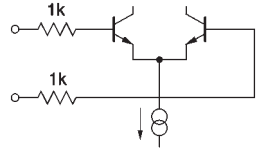

Fig.7

6) I/O of amplifiers 1 and 2

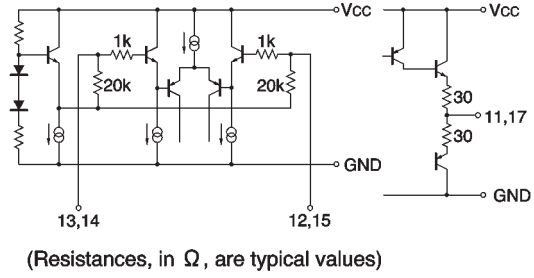

(Resistances, in Ω, are typical values)

Fig.8

7) I/O of hysteresis amplifiers

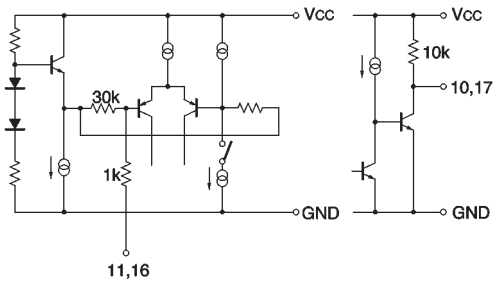

(Resistances, in Ω, are typical values)

Fig.9

∗ Note that resistance values of the I/O circuits can vary ± 30%

(2) Torque control

The R_{NF}-pin output voltage is plotted against the torque control input voltage (E_C) in Fig. 10.

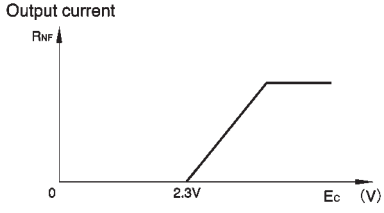

Fig.10

(3) Start/stop pin

The I/O equivalent circuit of the start/stop pin is shown in (1). 1) of "Precautions for use." The pin has a temperature dependence of −7mV/°C, and the resistance can vary ±30%. Take the temperature effect into consideration when designing your application.

(4) Hall input

The I/O equivalent circuit of the Hall input pins is shown in (1). 5) of "Precautions for use." The Hall devices can be connected in either series or parallel.

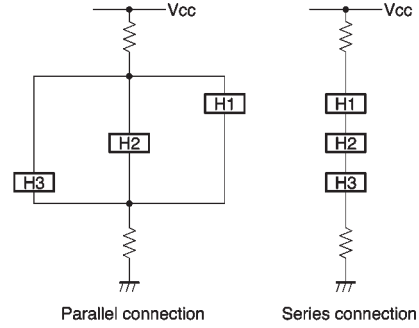

Fig.11

(5) Torque limit pin (pin 18)

The output current can be limited by applying a voltage to the torque limit pin. Control is provided so that this pin will have the same potential as the power ground pin. Note that there is a voltage offset on this pin. The R_{NF}-pin voltage is 0.325V when the TL-pin voltage is 0.4V (typical) and the R_{NF}-pin resistance is 0.5Ω. Note that the voltage offset changes with the R_{NF}-pin resistance.

(6) Amplifiers 1 and 2

Unpredictable outputs may occur when the amplifier input is outside the recommended range.

(7) Hysteresis amplifier

An input range of 0.6V to (V_{CC} ∼ 1.2V) is recommended. Unpredictable outputs may occur when the input is outside this range.

(8) Thermal shutdown circuit (TSD)

The circuit puts the driver outputs (A1, A2, and A3) to the open state at the temperature of 175°C (typical). There is a temperature difference of about 20°C between the temperatures at which the circuit is activated and deactivated.

●Application example

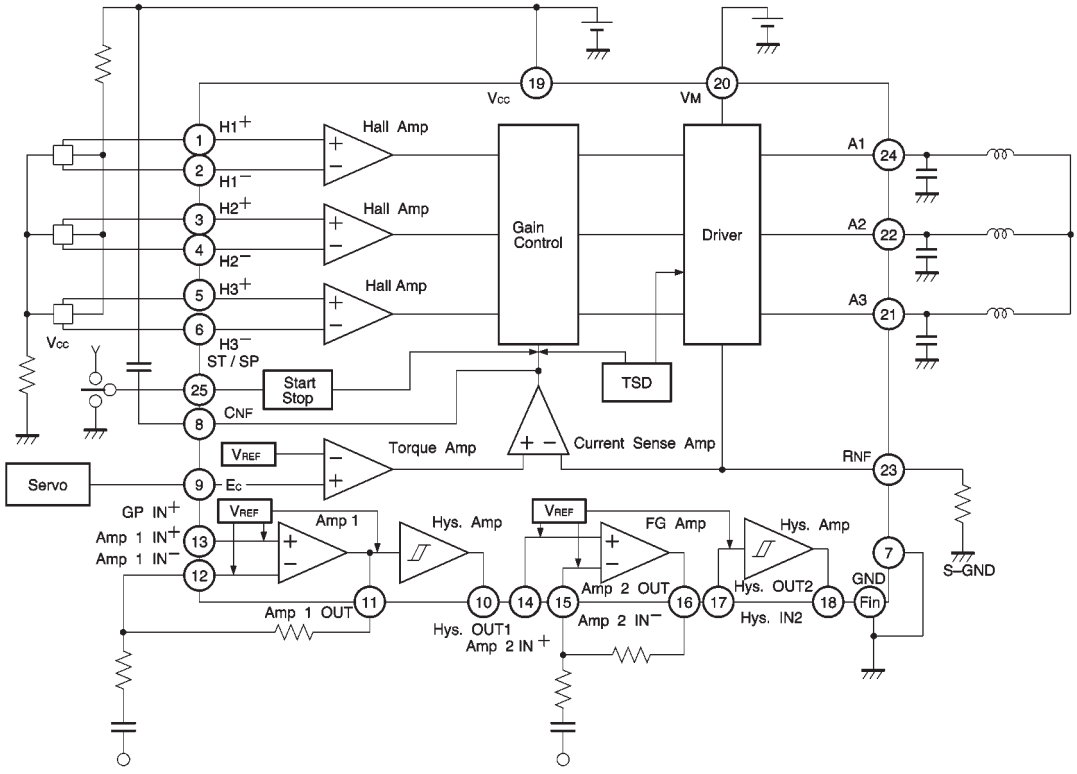

Fig.12

●Electrical characteristic curves

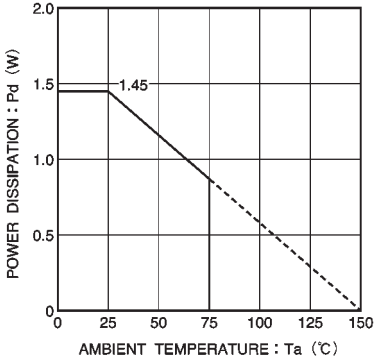

Fig.13 Power dissipation curves

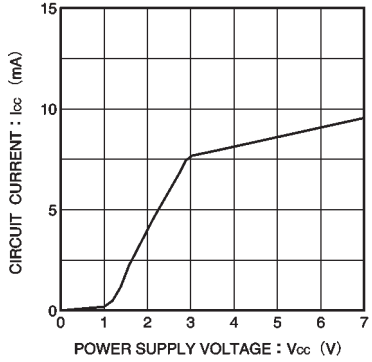

Fig.14 Supply current vs. power supply voltage

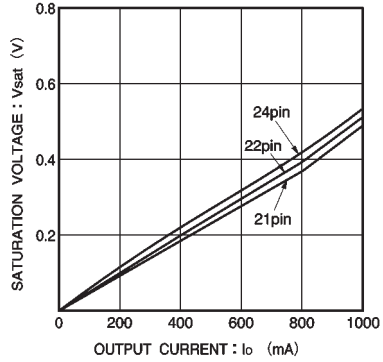

Fig.15 Low-side output saturation voltage vs. output current

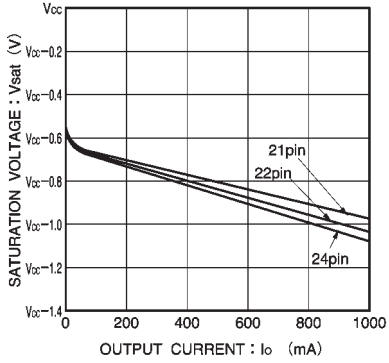

Fig.16 High-side output saturation voltage vs. output current

●External dimensions (Units: mm)

