LED driver

BA618

The BA618 is an IC developed for driving 7-segment LED displays, and contains seven positive logic circuits. Input and output are directed in the same direction by DIP Pin 16, with the layout optimized to facilitate mounting.

●Applications

LED drivers

Relay drivers

●Features

1) Contains seven circuits.
2) Current of up to 100mA can be driven.
3) Input and output are directed in the same direction, for easy mounting.
4) Can be directly coupled with TTL.

●Block diagram

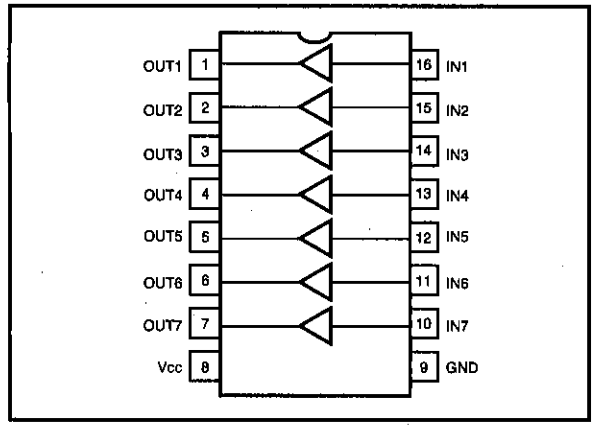

●Absolute maximum ratings (Ta=25℃)

Parameter	Symbol	Limits	Unit
Power supply voltage	V_{CC}	16	V
Power dissipation	Pd	500*	mW
Operating temperature	Topr	−30~75	℃
Storage temperature	Tstg	−55~125	℃
Maximum drive current	I_{OUT}	100	mA
Allowable input voltage	V_{IN}	−0.5~16	V

* Reduced by 5mW for each increase in Ta of 1°C over 25°C.

●Internal circuit configuration diagram

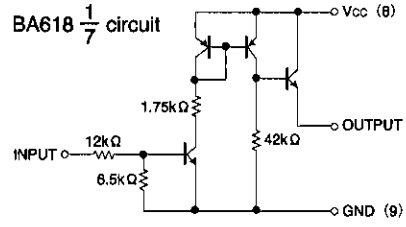

Fig.1

●Electrical characteristics (unless otherwise noted, Ta=25℃, V_{CC}=10V, R_L=100Ω, C_L=20pF)

Parameter	Symbol	Min.	Typ.	Max.	Unit	Conditions	Measurement Circuit
Output (Low) circuit current	$I_{CC\ (OFF)}$	—	—	500	μA	V_{IN}=0V	Fig.4
Output (High) input current	$I_{IN\ (ON)}$	—	0.4	0.8	mA	V_{IN}=5V, V_{OUT}≧8.5V	Fig.4
Output (High) input voltage	$V_{IN\ (ON)}$	—	1.9	2.5	V	V_{OUT}≧8.5V (R_L=200Ω)	Fig.4
Output (Low) voltage	$V_{IN\ (OFF)}$	0.8	1.5	—	V	V_{OUT}≦3mV	Fig.4
Output (High) voltage	$V_{OUT\ (IN)}$	8.5	8.9	—	V	V_{IN}=2.5V	Fig.4
Output (Low) leakage current	$I_{OL\ (OFF)}$	—	—	30	μA	V_{IN}=0.8V	Fig.4
Output (High) input voltage II	$V_{INII\ (ON)}$	—	1.9	3	V	V_{OUT}≧8.5V	Fig.4

●Electrical characteristic curves

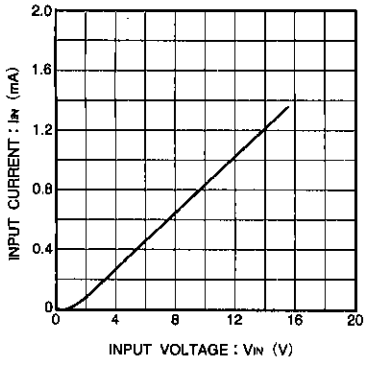

Fig. 2 Input characteristic

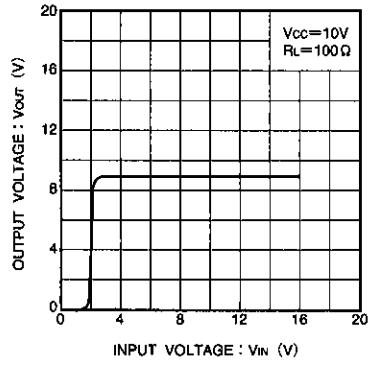

Fig. 3 Input/output characteristic

●Measurement circuits

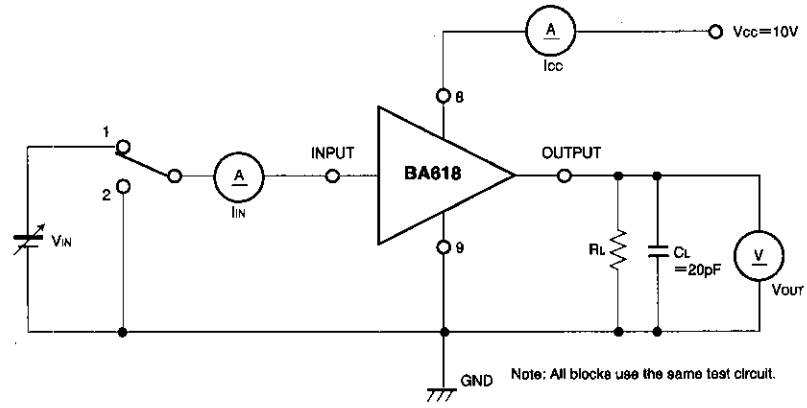

Fig.4

●Application example

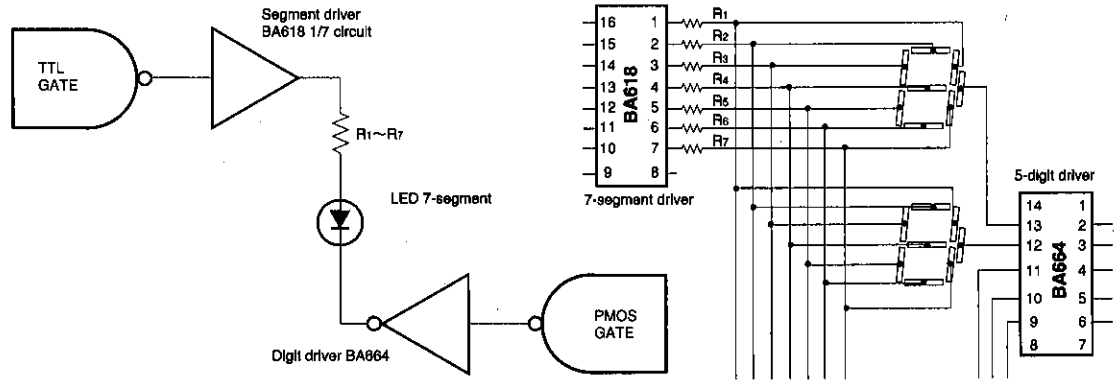

Fig. 5 7-segment, 5-digit LED driver circuit

●External dimensions (Units: mm)

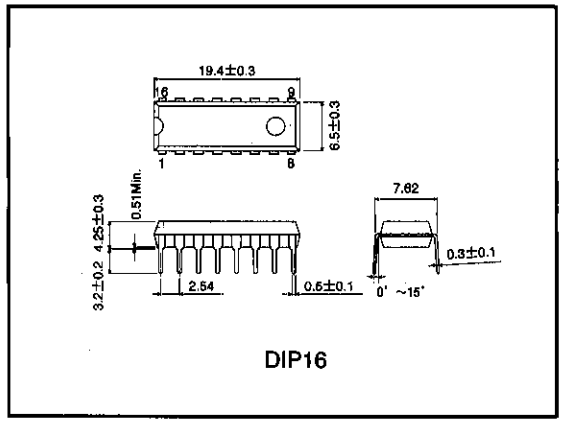

Notes

- The contents described in this catalogue are correct as of March 1997.
- No unauthorized transmission or reproduction of this book, either in whole or in part, is permitted.
- The contents of this book are subject to change without notice. Always verify before use that the contents are the latest specifications. If, by any chance, a defect should arise in the equipment as a result of use without verification of the specifications, ROHM CO., LTD., can bear no responsibility whatsoever.
- Application circuit diagrams and circuit constants contained in this data book are shown as examples of standard use and operation. When designing for mass production, please pay careful attention to peripheral conditions.
- Any and all data, including, but not limited to application circuit diagrams, information, and various data, described in this catalogue are intended only as illustrations of such devices and not as the specifications for such devices. ROHM CO., LTD., disclaims any warranty that any use of such device shall be free from infringement of any third party's intellectual property rights or other proprietary rights, and further, assumes absolutely no liability in the event of any such infringement, or arising from or connected with or related to the use of such devices.
- Upon the sale of any such devices; other than for the buyer's right to use such devices itself, resell or otherwise dispose of the same; no express or implied right or license to practice or commercially exploit any intellectual property rights or other proprietary rights owned or controlled by ROHM CO., LTD., is granted to any such buyer.
- The products in this manual are manufactured with silicon as the main material.
- The products in this manual are not of radiation resistant design.

The products listed in this catalogue are designed to be used with ordinary electronic equipment or devices (such as audio-visual equipment, office-automation equipment, communications devices, electrical appliances, and electronic toys). Should you intend to use these products with equipment or devices which require an extremely high level of reliability and the malfunction of which would directly endanger human life (such as medical instruments, transportation equipment, aerospace machinery, nuclear-reactor controllers, fuel controllers, or other safety devices) please be sure to consult with our sales representatives in advance.

- Notes when exporting
  - It is essential to obtain export permission when exporting any of the above products when it falls under the category of strategic material (or labor) as determined by foreign exchange or foreign trade control laws.
  - Please be sure to consult with our sales representatives to ascertain whether any product is classified as a strategic material.