Audio Accessory ICs

Preamps with Built-in ALC

BA3308F,BA3308FV

No.11087EBT01

●Description

The BA3308F/FV is a dual preamplifier for recording and playback with ALC (auto level control), developed for stereo radio, cassette recorders, tape recorders, and other pre amplifiers audio applications.
ALC circuit has a build in rectification circuit with wide adjustable dynamic range, high gain, low distortion amplifiers with direct coupling and mute circuit, used to cut off pop noise during power on.
Available in SOP14, or SSOP-B14 Packages.

●Features

1) Built-in ALC rectification diode
2) Wide operating power supply voltage range (V_{CC}=4.5~14 V)
3) Low current consumption (I_Q=3.5mA)
4) High gain (G_{VO}=80dB)
5) Low distortion (THD=0.1%)
6) Low noise (V_{NIN}=1 μV_{rms})
7) Input coupling capacitor not needed
8) Good ALC channel balance
9) Built-in power supply mute circuit
10) Dynamic range of ALC can be changed by attaching input resistance.

●Applications

Stereo radio, cassette tape recorders, stereo cassette decks, home stereos, music centers, etc.

●Line up matrix

Part No.	BA3308F	BA3308FV
Package	SOP14	SSOP-B14

© 2011 ROHM Co., Ltd. All rights reserved.

●**Absolute maximum ratings**(Ta=25℃)

Parameter		Symbol	Limits	Unit
Supply voltage		V_{CC}	16	V
Power dissipation	BA3308F	Pd	450[*1]	mW
	BA3308FV		350[*2]	
Operating temperature		Topr	−25～+75	℃
Storage temperature		Tstg	−55～+125	℃

[*1] Reduce by 4.5 mW/°C over 25°C, when mounted on a 70mm×70mm×1.6mm PCB board.

[*2] Reduce by 3.5 mW/°C over 25°C

●**Operating conditions**(Ta=25℃)

Parameter	Symbol	Min.	Typ.	Max.	Unit
Supply voltage	Vcc	4.5	-	14	V

Note: This IC is not designed to be radiation-resistant.

●**Electrical characteristics**(Unless otherwise noted, Ta=25℃, Vcc=7.0V, f=1kHz, BPF20～20kHz)

Parameter	Symbol	Min.	Typ.	Max.	Unit	Conditions	Test Circuit
Quiescent current	I_Q	1.5	3.5	4.5	mA	V_{IN}=0V_{rms}	Fig.17
Open loop voltage gain	G_{VO}	70	80	-	dB	V_{OUT}=-10dBV	Fig.17
Total harmonic distortion	THD	-	0.1	0.3	%	NAB34dB, V_{OUT}=40mV_{rms}	Fig.17
Input resistance	R_{IN}	15	25	45	kΩ		Fig.17
Maximum output voltage	V_{OM}	0.6	1.2	-	V_{rms}	THD=1%	Fig.17
Input conversion noise voltage	V_{NIN}	-	1	2	μV_{rms}	Rg=2.2kΩ, referenced to NAB 34dB at 1kHz	Fig.17
ALC range	ALC	40	45	-	dB	R_g=3.9 kΩ, V_{IN}=-70 dBV standard, THD=3%	Fig.17
ALC channel balance	ΔALC	-	0	2.5	dB	V_{IN}=-60dBV,-30dBV	Fig.17
Channel separation	CS	60	75	-	dB	V_O=0dBV, NAB 34dB	Fig.17

© 2011 ROHM Co., Ltd. All rights reserved.

●Block diagram

BA3308F/FV

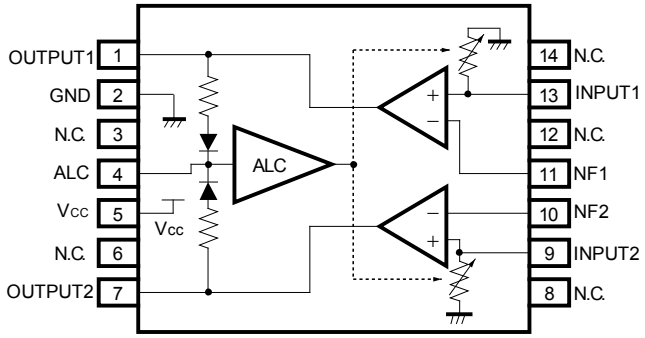

Fig.1

© 2011 ROHM Co., Ltd. All rights reserved.

●Electrical characteristic curves (Reference data)

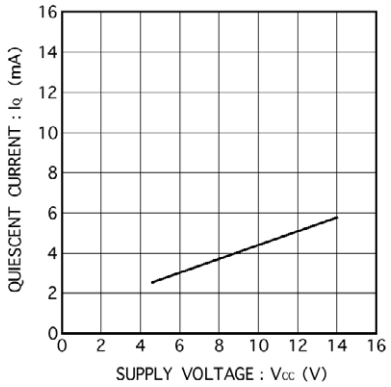

Fig.2 Quiescent current vs. power supply voltage

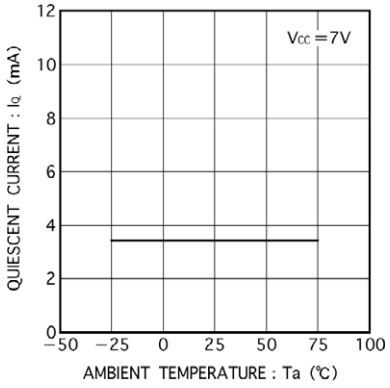

Fig.3 Quiescent current vs. ambient temperature

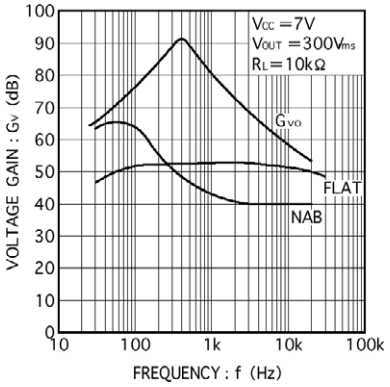

Fig.4 Voltage gain vs. frequency

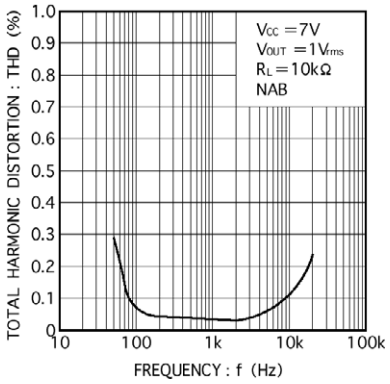

Fig.5 Total harmonic distortion vs. frequency

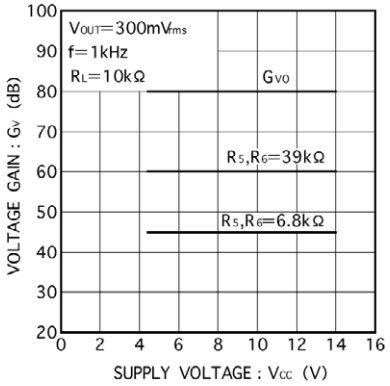

Fig.6 Voltage gain vs. supply voltage

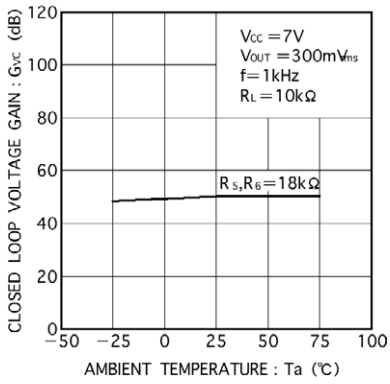

Fig.7 Closed loop voltage gain vs. ambient temperature

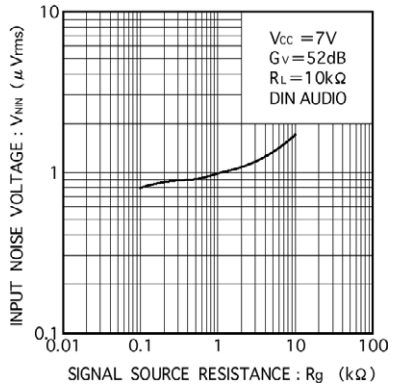

Fig.8 Input conversion noise voltage vs. signal source resistance

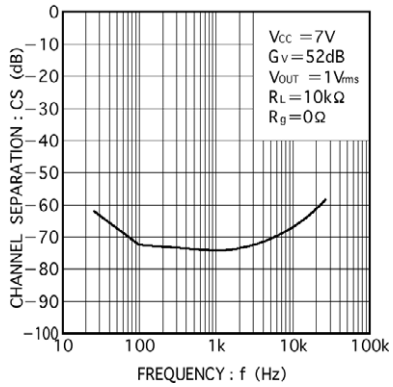

Fig.9 Channel separation vs. frequency

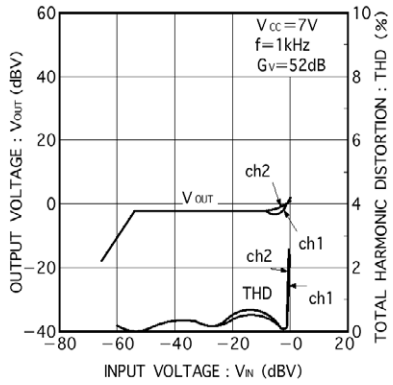

Fig.10 ALC characteristics

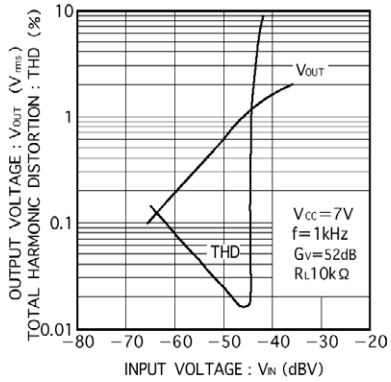

Fig.11 Input/output characteristics

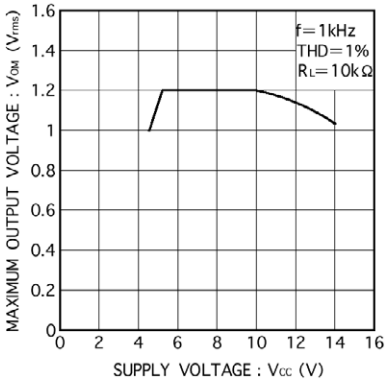

Fig.12 Maximum output voltage vs. power supply voltage

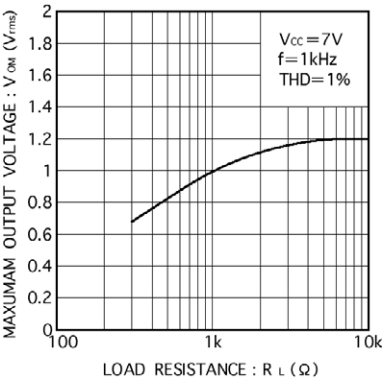

Fig.13 Maximum output voltage vs. load resistance

© 2011 ROHM Co., Ltd. All rights reserved.

●Description of operations

1. Recording
   1) Record amplifier

The BA3308F/FV amplifier of ch1 and ch2 input stage (13pin, 9pin) can be direct coupled or use coupling capacitors (C1/C2). The voltage gain of the record amplifier is determined by $G_V=R_5/R_3$. The R5/R6, and C3/R3 regulate control of the pop noise that occurs at power-on (see "Cautions on use") and direct current bias fed back is set by R5/R6 and C5/C6 at the output stage.

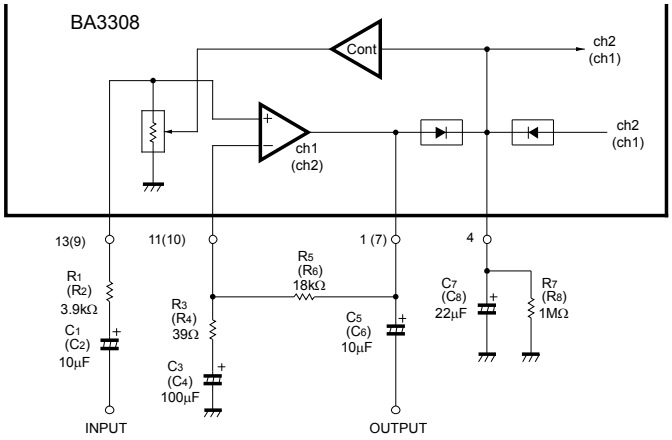

Fig.14

   2) ALC

The BA3308F/FV has an on-chip signal rectifier and electronic volume needed for ALC. The signal rectifier compares the direct current output voltage that is superposed in the output stage (1, 7pin) signal to the reference voltage $4.5V_F$ (≒3V; $1V_F$ is approximately 0.7V) in the comparator circuit and if the output voltage is higher, it turns the comparator ON to charge the smoothing capacitor C_7. Since the operation point of the output stage of amplifier ch1 and ch2 is fixed at $3V_F$, the comparator turns ON when the peak value of the signal output voltage is $1.5V_F$ (effective value approx. 0.75V). Once the direct current signal for electronic volume is controlled, ALC operation starts. The electronic volume, which is connected between the input line (13, 9pin) and GND, causes the input signal to attenuate according to the ratio of the external resistance (R_1, R_2) to the resistance value of the electronic volume. The ALC range varies according to the values of R_1 and R_2. For small ALC variation the S/N will determinate an adequate ALC range is obtained by applying several kΩ of the R_1 and R_2. The attack time and recovery time of ALC are set according to C7 and R7 of 4pin. If the time constants (C_7, R_7) are large, the recovery time will be long and as C_7 becomes smaller, and the attack time will be shorter.

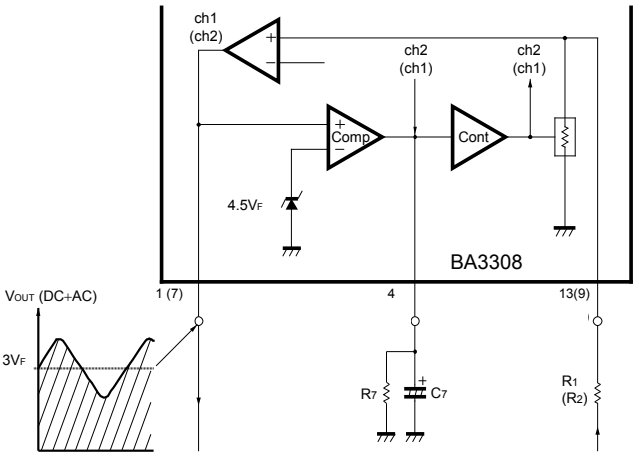

Fig.15

© 2011 ROHM Co., Ltd. All rights reserved.

2. On playback

Since amplifier ch1 and ch2 are used as a NAB equalizer amplifier at playback, a time constant circuit is established in the NF section (1-11pin, 7-10pin) to obtain NAB characteristics. The voltage gain at this time is determined by the following formula:

$G_V = |R_{11} + R_9/(|+j\omega C_9 \cdot R_9)|/R_3$

Obtain the necessary gain by regulating the (power-on pop noise prevention) NAB time constant circuit in the same way when regulating the gain at recording stage. The operating point of the output stage (1,7pin) is fixed at 3VF. Accordingly, even if V_{CC} is raised to 5V or more, as in the V_{MAX}-V_{CC} characteristic (Fig.13), the maximum output voltage does not rise above 1.2V (Typ.). 4pin is grounded at playback since ALC is not needed. For better signal-to-noise ratio characteristics at playback, don't use R_1 and R_2, which are attached to the input pin (13pin, 9pin).

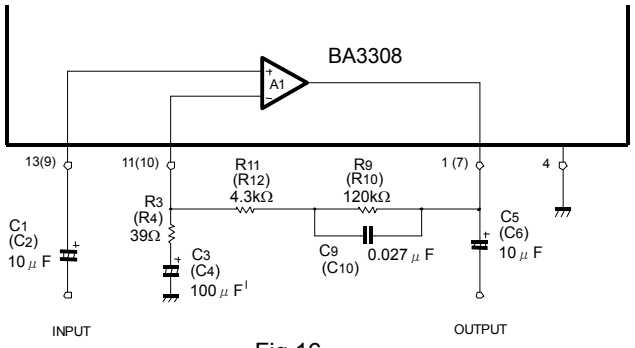

Fig.16

© 2011 ROHM Co., Ltd. All rights reserved.

●Measurement circuit

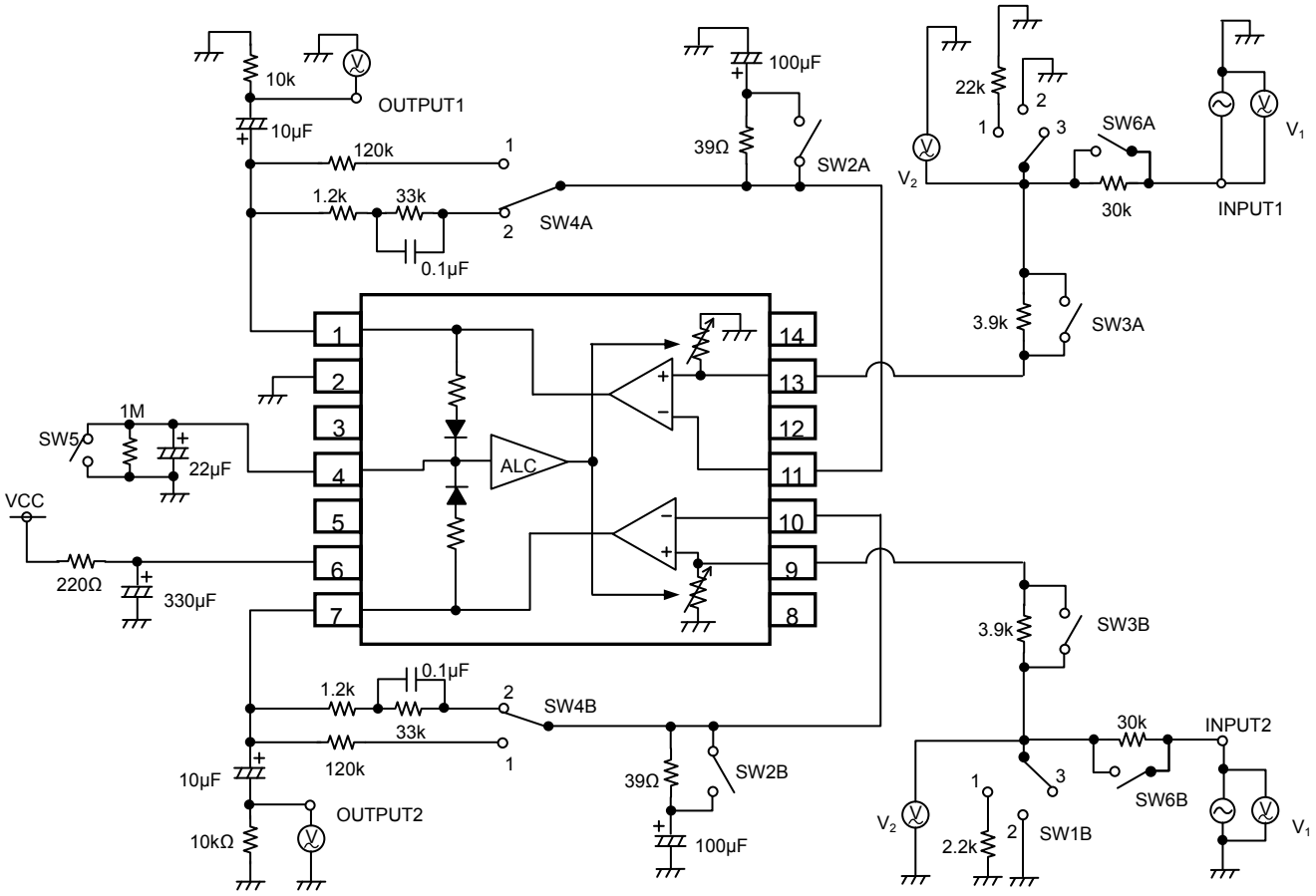

Fig.17

●Application circuit

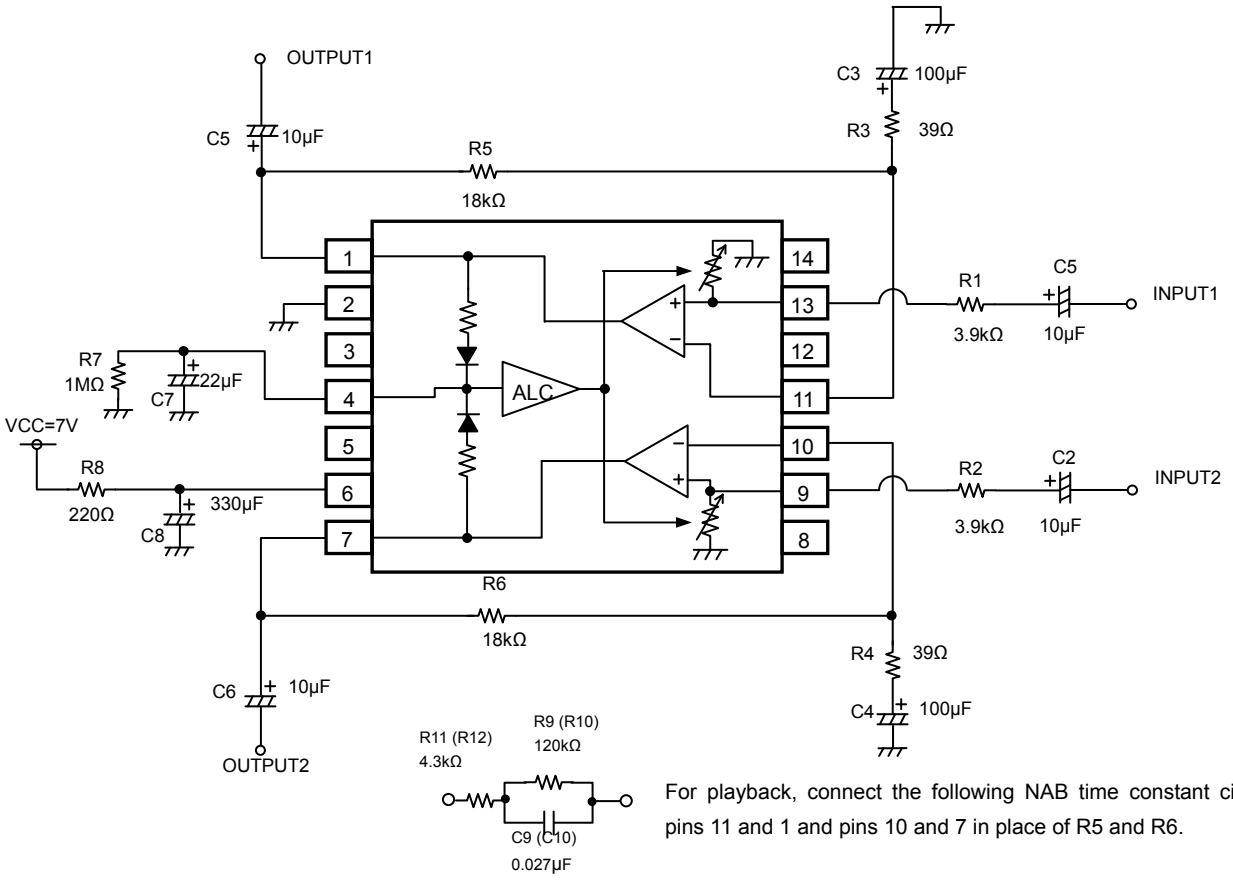

For playback, connect the following NAB time constant circuit between pins 11 and 1 and pins 10 and 7 in place of R5 and R6.

Fig.18

© 2011 ROHM Co., Ltd. All rights reserved.

●Notes for use

1) Numbers and data in entries are representative design values and are not guaranteed values of the items.
2) Although ROHM is confident that the example application circuit reflects the best possible recommendations, be sure to verify circuit characteristics for your particular application. Modification of constants for other externally connected circuits may cause variations in both static and transient characteristics for external components as well as this Rohm IC. Allow for sufficient margins when determining circuit constants.
3) Absolute maximum ratings
   Use of the IC in excess of absolute maximum ratings, such as the applied voltage or operating temperature range (Topr), may result in IC damage. Assumptions should not be made regarding the state of the IC (short mode or open mode) when such damage is suffered. A physical safety measure, such as a fuse, should be implemented when using the IC at times where the absolute maximum ratings may be exceeded.
4) GND potential
   Ensure a minimum GND pin potential in all operating conditions. Make sure that no pins are at a voltage below the GND at any time, regardless of whether it is a transient signal or not.
5) Thermal design
   Perform thermal design, in which there are adequate margins, by taking into account the permissible dissipation (Pd) in actual states of use.
6) Short circuit between terminals and erroneous mounting
   Pay attention to the assembly direction of the ICs. Wrong mounting direction or shorts between terminals, GND, or other components on the circuits, can damage the IC.
7) Operation in strong magnetic fields
   Using the ICs in a strong electromagnetic field can cause operation malfunction.
8) The BA3308F/FV has an on-chip power supply mute circuit that checks for pop noise at power-on. This prevents the occurrence of pop noise by timing the charge times of the direct current cut capacitors C_3 and C_4 of 10pin and 11pin, and of capacitor C_8 for the ripple filter of 5pin.
   Accordingly, to obtain an adequate effect, it is recommended that the constants of the application circuit be used in C_3, C_4, R_3, R_4, C_8, and R_8.

© 2011 ROHM Co., Ltd. All rights reserved.

●**Ordering part number**

B	A	3	3	0	8	F		-	E	2

Part No. (BA)

Part No. (3308)

Package
F: SOP14
FV: SSOP-B14

Packaging and forming specification
E2: Embossed tape and reel

SOP14

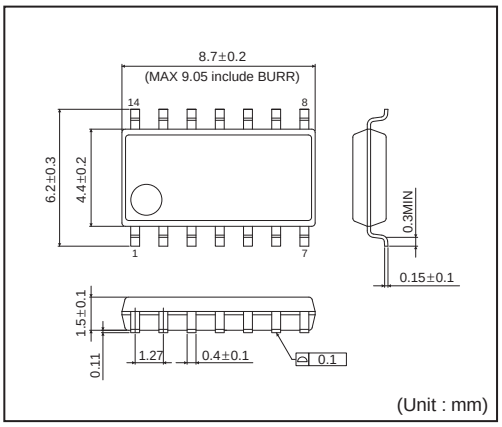

<Tape and Reel information>

Tape	Embossed carrier tape
Quantity	2500pcs
Direction of feed	E2 (The direction is the 1pin of product is at the upper left when you hold reel on the left hand and you pull out the tape on the right hand)

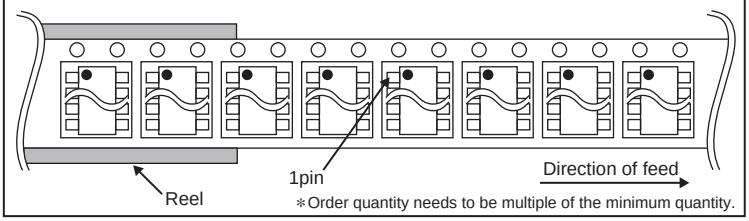

∗Order quantity needs to be multiple of the minimum quantity.

SSOP-B14

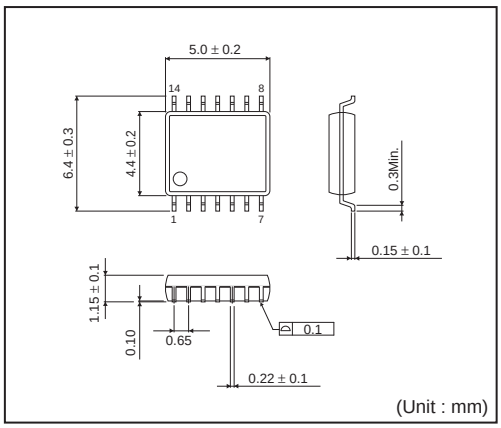

<Tape and Reel information>

Tape	Embossed carrier tape
Quantity	2500pcs
Direction of feed	E2 (The direction is the 1pin of product is at the upper left when you hold reel on the left hand and you pull out the tape on the right hand)

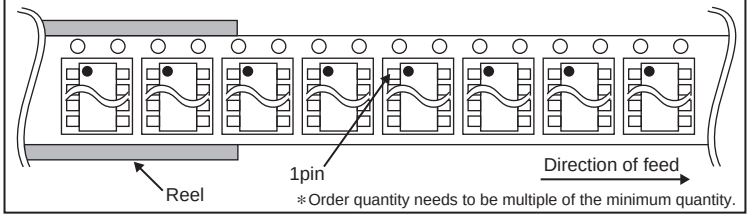

∗Order quantity needs to be multiple of the minimum quantity.

© 2011 ROHM Co., Ltd. All rights reserved.

Notes

No copying or reproduction of this document, in part or in whole, is permitted without the consent of ROHM Co.,Ltd.

The content specified herein is subject to change for improvement without notice.

The content specified herein is for the purpose of introducing ROHM's products (hereinafter "Products"). If you wish to use any such Product, please be sure to refer to the specifications, which can be obtained from ROHM upon request.

Examples of application circuits, circuit constants and any other information contained herein illustrate the standard usage and operations of the Products. The peripheral conditions must be taken into account when designing circuits for mass production.

Great care was taken in ensuring the accuracy of the information specified in this document. However, should you incur any damage arising from any inaccuracy or misprint of such information, ROHM shall bear no responsibility for such damage.

The technical information specified herein is intended only to show the typical functions of and examples of application circuits for the Products. ROHM does not grant you, explicitly or implicitly, any license to use or exercise intellectual property or other rights held by ROHM and other parties. ROHM shall bear no responsibility whatsoever for any dispute arising from the use of such technical information.

The Products specified in this document are intended to be used with general-use electronic equipment or devices (such as audio visual equipment, office-automation equipment, communication devices, electronic appliances and amusement devices).

The Products specified in this document are not designed to be radiation tolerant.

While ROHM always makes efforts to enhance the quality and reliability of its Products, a Product may fail or malfunction for a variety of reasons.

Please be sure to implement in your equipment using the Products safety measures to guard against the possibility of physical injury, fire or any other damage caused in the event of the failure of any Product, such as derating, redundancy, fire control and fail-safe designs. ROHM shall bear no responsibility whatsoever for your use of any Product outside of the prescribed scope or not in accordance with the instruction manual.

The Products are not designed or manufactured to be used with any equipment, device or system which requires an extremely high level of reliability the failure or malfunction of which may result in a direct threat to human life or create a risk of human injury (such as a medical instrument, transportation equipment, aerospace machinery, nuclear-reactor controller, fuel-controller or other safety device). ROHM shall bear no responsibility in any way for use of any of the Products for the above special purposes. If a Product is intended to be used for any such special purpose, please contact a ROHM sales representative before purchasing.

If you intend to export or ship overseas any Product or technology specified herein that may be controlled under the Foreign Exchange and the Foreign Trade Law, you will be required to obtain a license or permit under the Law.

ROHM SEMICONDUCTOR

Thank you for your accessing to ROHM product informations.
More detail product informations and catalogs are available, please contact us.

ROHM Customer Support System

http://www.rohm.com/contact/

© 2011 ROHM Co., Ltd. All rights reserved.