BA301N-D

Order Code: BA301N-D

Gas Discharge Tube

Version: A0 2013-09-17

Features

- Small Size Design EIA 1812 4.5×3.2×2.7mm
- Current Handling Capability 1,000A @ 8/20 μ s
- Low Capacitance and Insertion Loss
- Fast Response and Long Service Life
- Reliable to Protect Electrostatic Surge
- Moisture sensitivity level：Level 1

Exterior

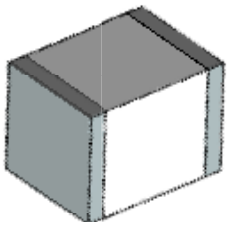

SMD

Application information

- Power supplies: DC12V/AC24V
- Consumer electronics
-
-
-

Package (Top View)



Agency Approvals

Icon	Description
RoHS	Compliance with 2011/65/EU
HF	Compliance with IEC61249-2-21:2003
Pb	Mean lead free

Schematic Symbol

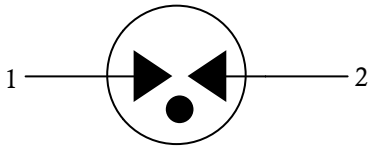

Electrical Parameter

DC Breakdown Voltage 1)2)	100V/s	210-390	V
Impulse Spark-over Voltage	At 1kV/μs	for 99 % of measured values ≤ 750	V
	At 1kV/μs	Typical values of distribution ≤ 700	V
Impulse Discharge Current 3)	8/20μs	1,000	A
Arc Voltage	At 1A	~15	V
Insulation Resistance	DC=100V	≥1	GΩ
Capacitance at 1 MHz	V_{DC}=0.5V	≤1.0	pF
Weight		~0.20	g
Operating And Storage Temperature		-40-90	℃
Marking		Without	

1) At delivery AQL 0.65 level II GB/T 2828.1-2003
2) In ionized mode
3) Terms and waveforms in accordance with ITU-T Rec. K. 12; IEC 61643-21

Specifications are subject to change without notice.
Customers should verify actual device performance in their specific applications

Part Numbering System

BA 301 N -- D

(1) (2) (3) (4)

(1)Bencent Gas Discharge Tube

(2) Series: DC Breakdown Voltage, e.g.: 151=15×10[1]=150V

(3) Tolerance of DC Breakdown Voltage, M=+-20%,

N=+-30%,the Specific tolerance is decided by the table of "Electrical Parameter"

(4) "-D" denotes lower impulse Vbo product

Product Characteristics

Lead Material	Copper or iron nickel alloy
Body Material	Ceramics
Terminal Finish	100% Matte-Tin Plated

Environmental Reliability Characteristics

Testing items	Technical standards
High Temperature Storage Test	Temperature: 85℃ Time:2H
Low Temperature Storage Test	Temperature: -40℃ Time:2H
Vibration	Frequency：10-500Hz Amplitude：0.15mm Time：45mins
Resistance of soldering heat	Temperature: 260±5℃ Time of dip soldering：10s，1time

Note: Up-screen program can be specified by customer's request via contacting Bencent service

Solderability test

Solderability	Solder Pot Temperature:	245℃±5℃
	Solder Dwell Time:	4-6 seconds

Product Dimensions

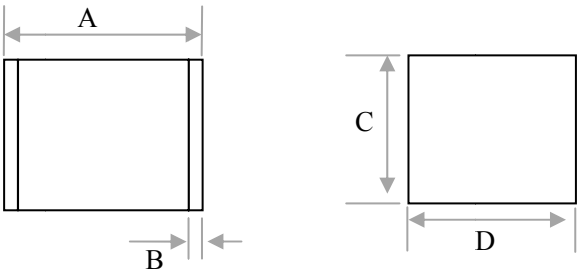

REF	mm	inch
A	4.5±0.3	0.177±0.012
B	0.5±0.2	0.020±0.008
C	2.7±0.2	0.106±0.008
D	3.2±0.2	0.126±0.008

Recommended Soldering Pad

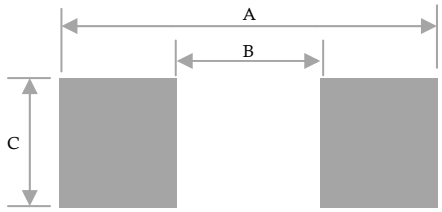

REF	mm	inch
A	5.5	0.217
B	3.5	0.138
C	3.5	0.138

Specifications are subject to change without notice.
Customers should verify actual device performance in their specific applications

Reflow Profile

Reflow Condition		Pb-Free assembly
Pre Heat	Temperature Min	150°C
	Temperature Max	200°C
	Time （min to max）	60 – 180 secs
Average ramp up rate（Liquids）Tamp （T_L） to peal		3°C/second max
T_S(max) to T_L - Ramp-up Rate		3°C/second max
Reflow	- Temperature (T_L) (Liquids)	217°C
	- Temperature (T_L)	60 – 150 seconds
Peak Temperature (T_P)		260+0/-5 °C
Time within 5°C of actual peak Temperature (t_p)		8 – 20 seconds
Ramp-down Rate		6°C/second max
Time 25°C to peak Temperature (T_P)		8 minutes Max.
Do not exceed		260°C

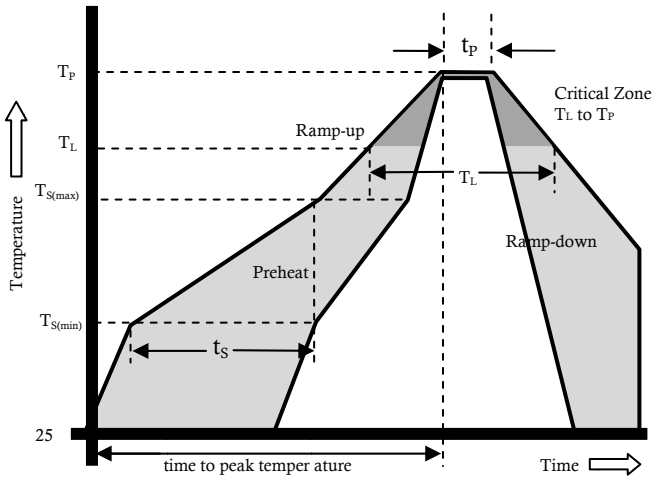

Package Reel Information

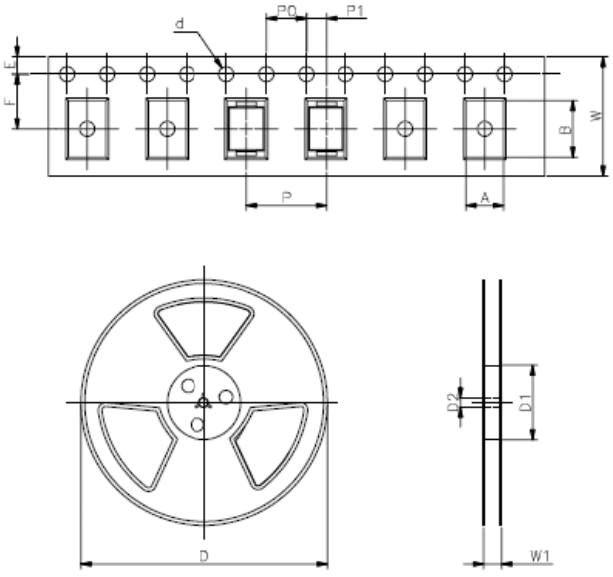

REF	mm	inch
A	3.7±0.2	0.146±0.008
B	4.7±0.2	0.185±0.008
d	Φ1.5±0.1	Φ0.059±0.004
E	1.75±0.1	0.069±0.004
F	5.5±0.1	0.217±0.002
P	8.0±0.1	0.315±0.004
P0	4.0±0.1	0.157±0.004
P1	2.0±0.1	0.079±0.004
W	12.0±0.2	0.472±0.008
D	Φ330.0	Φ13.0
D1	Φ50Min	Φ1.97Min
D2	Φ13±0.15	0.512±0.006
W1	16.8±2.0	0.661±0.079

OUTLINE	REEL (PCS)	PER CARTON (PCS)	REEL DIAMETERS (mm)	CARTON SIZE(mm)		
				L	W	H
TAPING	2,000	32,000	330	360	360	380

Specifications are subject to change without notice.
Customers should verify actual device performance in their specific applications