STRUCTURE SILICON MONOLITHIC INTEGRATED CIRCUIT

FUNCTION GROUND SENSE DUAL VOLTAGE COMPARATORS

PRODUCT SERIES **BA10393F**

FEATURES • Open collector output

○ABSOLUTE MAXIMUM RATINGS(Ta=25[℃])

Parameter	Symbol	Rating	Unit
Supply Voltage	VCC-VEE	+36	V
Power dissipation	Pd	620(*1)(*2)	mW
Differential Input Voltage (*3)	Vid	(VCC-VEE)	V
Input Common-mode Voltage Range	Vicm	(VEE-0.3)～VCC	V
Operating Temperature	Topr	-40～+85	℃
Storage Temperature Range	Tstg	-55～+125	℃
Maximum junction Temperature	Tjmax	125	℃

• This IC is not designed for protection against radioactive rays.
(*1) To use at temperature above Ta=25[℃] reduce 6.2[mW]/[℃].
(*2) Mounted on a glass epoxy PCB(70[mm]×70[mm]×1.6[mm])
(*3) The voltage difference between inverting input and non-inverting input is the differential input voltage. Then input terminal voltage is set to more than VEE.

○OPERATING CONDITION(Ta=-40～+85[℃])

Parameter	Symbol	Rating	Unit
Supply Voltage	VCC	+2.0～+36.0 (Single Supply)	V
		±1.0～±18.0 (Split Supply)	

Status of this document
The Japanese version of this document is the formal specification.
A customer may use this translation version only for a reference to help reading the formal version.
If there are any differences in translation version of this document formal version takes priority.

Application example
•ROHM cannot provide adequate confirmation of patents.
• The product described in this specification is designed to be used with ordinary electronic equipment or devices (such as audio-visual equipment, office-automation equipment, communications devices, electrical appliances, and electronic toys).
Should you intend to use this product with equipment or devices which require an extremely high level of reliability and the malfunction of which would directly endanger human life (such as medical Instruments, transportation equipment, aerospace machinery, nuclear-reactor controllers, fuel controllers and other safety devices),please be sure to consult with our sales representative in advance.
•ROHM assumes no responsibility for use of any circuits described herein, conveys no license under any patent or other right, and makes no representations that the circuits are free from patent infringement.

○ELECTRICAL CHARACTERISTICS (unless otherwise specified VCC=+5[V]、VEE=0[V])

Parameter	Symbol	Temperature Range	Guaranteed Limit			Unit	Condition
			Min.	Typ.	Max.		
Input Offset Voltage (*4)	Vio	25℃	-	1	5	mV	VOUT=1.4[V]
Input Offset Current (*4)	Iio	25℃	-	5	50	nA	VOUT=1.4[V]
Input Bias Current (*5)	Ib	25℃	-	50	250	nA	VOUT=1.4[V]
Input Common-mode Voltage Range	Vicm	25℃	0	-	VCC-1.5	V	-
Large Signal Voltage Gain	AV	25℃	93	106	-	dB	VCC=15[V], VOUT=1.4～11.4[V], RL=15[kΩ], VRL=15[V]
Supply Current	ICC	25℃	-	0.4	1	mA	VOUT=open
Output Sink Current	IOL	25℃	6	16	-	mA	VIN+=0[V], VIN-=1[V], VOL=1.5[V]
Output Saturation Voltage (Low level Output Voltage)	VOL	25℃	-	250	400	mV	VIN+=0[V], VIN-=1[V], IOL=4[mA]
Output Leakage Current (High Level Output Current)	Ileak	25℃	-	0.1	-	nA	VIN+=1[V], VIN-=0[V], VOH=5[V]
			-	-	1	μA	VIN+=1[V], VIN-=0[V], VOH=36[V]
Response Time	Tre	25℃	-	1.3	-	μs	RL=5.1[kΩ], VRL=5[V], VIN=100[mVp-p], overdrive=5[mV]

(*4) Absolute value.
(*5) Since first input stage is composed with PNP transistor, input bias current flows out of IC.

○Physical Dimensions

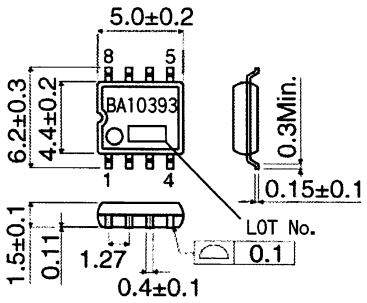

BA10393F(SOP8) (Unit:[mm])

○Block diagram

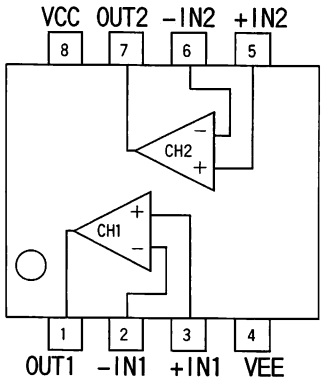

○Pin No.・Pin Name

Pin No.	Pin Name
1	OUT1
2	-IN1
3	+IN1
4	VEE
5	+IN2
6	-IN2
7	OUT2
8	VCC

○Application example

(1) Absolute maximum ratings
Absolute maximum ratings are the values which indicate the limits, within which the given voltage range can be safely charged to the terminal. However, it does not guarantee the circuit operation.

(2) The example of disabled circuit application
When there is a circuit not in use, it is recommended to make the non-inverting input terminal be the potential in the common-mode input voltage range like in Fig.1.

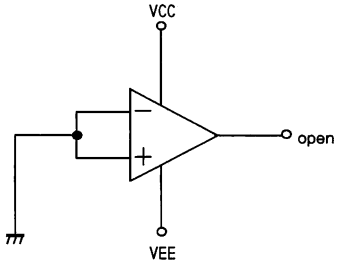

Fig.1 The example of disabled circuit

(3) Operating power supply (split power supply/single power supply)
The Comparator operates if a given level of voltage is applied between VCC and VEE. Therefore, the Comparator can be operated under single power supply or split power supply.

(4) Power dissipation(Pd)
If the IC is used under excessive power dissipation. An increase in the chip temperature will cause deterioration of the radical characteristics of IC. For example, reduction of current capability. Take consideration of the effective power dissipation and thermal design with a sufficient margin. Pd is reference to the provided power dissipation curve.

(5) Short circuits between pins and incorrect mounting
Short circuits between pins and incorrect mounting when mounting the IC on a printed circuits board, take notice of the direction and positioning of the IC. If IC is mounted erroneously, It may be damaged. Also, when a foreign object is inserted between output, between output and VCC terminal or VEE terminal which causes short circuit, the IC may be damaged.

(6) Output short circuit
If short circuit occurs between the output terminal and VCC terminal, excessive in output current may flow and generate heat, causing destruction of the IC. Take due care.

(7) Using under strong electromagnetic field
Be careful when using the IC under strong electromagnetic field because it may malfunction.

(8) Usage of IC
When stress is applied to the IC through warp of the printed circuit board, The characteristics may fluctuate due to the piezo effect. Be careful of the warp of the printed circuit board.

(9) Testing IC on the set board
When testing IC on the set board, in cases where the capacitor is connected to the low impedance, make sure to discharge per fabrication because there is a possibility that IC may be damaged by stress. When removing IC from the set board, it is essential to cut supply voltage. As a countermeasure against the static electricity, observe proper grounding during fabrication process and take due care when carrying and storage it.

(10) Output terminal capacitor
Tr in circuits may be damaged when VCC terminal and VEE terminal is shorted with the charged output terminal capacitor. When IC is used as a comparator or as an application circuit, where oscillation is not activated by an output capacitor, the output capacitor must be kept below 10[μF] in order to prevent the damage mentioned above.

Notes

- No technical content pages of this document may be reproduced in any form or transmitted by any means without prior permission of ROHM CO.,LTD.
- The contents described herein are subject to change without notice. The specifications for the product described in this document are for reference only. Upon actual use, therefore, please request that specifications to be separately delivered.
- Application circuit diagrams and circuit constants contained herein are shown as examples of standard use and operation. Please pay careful attention to the peripheral conditions when designing circuits and deciding upon circuit constants in the set.
- Any data, including, but not limited to application circuit diagrams information, described herein are intended only as illustrations of such devices and not as the specifications for such devices. ROHM CO.,LTD. disclaims any warranty that any use of such devices shall be free from infringement of any third party's intellectual property rights or other proprietary rights, and further, assumes no liability of whatsoever nature in the event of any such infringement, or arising from or connected with or related to the use of such devices.
- Upon the sale of any such devices, other than for buyer's right to use such devices itself, resell or otherwise dispose of the same, no express or implied right or license to practice or commercially exploit any intellectual property rights or other proprietary rights owned or controlled by
- ROHM CO., LTD. is granted to any such buyer.
- Products listed in this document are no antiradiation design.

The products listed in this document are designed to be used with ordinary electronic equipment or devices (such as audio visual equipment, office-automation equipment, communications devices, electrical appliances and electronic toys).
Should you intend to use these products with equipment or devices which require an extremely high level of reliability and the malfunction of with would directly endanger human life (such as medical instruments, transportation equipment, aerospace machinery, nuclear-reactor controllers, fuel controllers and other safety devices), please be sure to consult with our sales representative in advance.

About Export Control Order in Japan

Products described herein are the objects of controlled goods in Annex 1 (Item 16) of Export Trade Control Order in Japan.
In case of export from Japan, please confirm if it applies to "objective" criteria or an "informed" (by MITI clause) on the basis of "catch all controls for Non-Proliferation of Weapons of Mass Destruction.

Thank you for your accessing to ROHM product informations.

More detail product informations and catalogs are available,

please contact your nearest sales office.

Please contact our sales offices for details ;

U.S.A / San Diego	TEL : +1(858)625-3630	FAX : +1(858)625-3670
Atlanta	TEL : +1(770)754-5972	FAX : +1(770)754-0691
Dallas	TEL : +1(972)312-8818	FAX : +1(972)312-0330
Germany / Dusseldorf	TEL : +49(2154)9210	FAX : +49(2154)921400
United Kingdom / London	TEL : +44(1)908-282-666	FAX : +44(1)908-282-528
France / Paris	TEL : +33(0)1 56 97 30 60	FAX : +33(0) 1 56 97 30 80
China / Hong Kong	TEL : +852(2)740-6262	FAX : +852(2)375-8971
Shanghai	TEL : +86(21)6279-2727	FAX : +86(21)6247-2066
Dilian	TEL : +86(411)8230-8549	FAX : +86(411)8230-8537
Beijing	TEL : +86(10)8525-2483	FAX : +86(10)8525-2489
Taiwan / Taipei	TEL : +866(2)2500-6956	FAX : +866(2)2503-2869
Korea / Seoul	TEL : +82(2)8182-700	FAX : +82(2)8182-715
Singapore	TEL : +65-6332-2322	FAX : +65-6332-5662
Malaysia / Kuala Lumpur	TEL : +60(3)7958-8355	FAX : +60(3)7958-8377
Philippines / Manila	TEL : +63(2)807-6872	FAX : +63(2)809-1422
Thailand / Bangkok	TEL : +66(2)254-4890	FAX : +66(2)256-6334

Japan /
(Internal Sales)

Tokyo 2-1-1, Yaesu, Chuo-ku, Tokyo 104-0082
TEL : +81(3)5203-0321 FAX : +81(3)5203-0300

Yokohama 2-4-8, Shin Yokohama, Kohoku-ku, Yokohama, Kanagawa 222-8575
TEL : +81(45)476-2131 FAX : +81(45)476-2128

Nagoya Dainagayo Building 9F 3-28-12, Meieki, Nakamura-ku, Nagoya,Aichi 450-0002
TEL : +81(52)581-8521 FAX : +81(52)561-2173

Kyoto 579-32 Higashi Shiokouji-cho, Karasuma Nishi-iru, Shiokoujidori, Shimogyo-ku, Kyoto 600-8216
TEL : +81(75)311-2121 FAX : +81(75)314-6559

(Contact address for overseas customers in Japan)

Yokohama TEL : +81(45)476-9270 FAX : +81(045)476-9271

As of 18th. April 2005