STRUCTURE	Silicon Monolithic Integrated Circuit
TYPE	1A Low Dropout Voltage Regulator with Shut Down Switch(Adjustable Voltage)
PRODUCT SERIES	**BAOOCCOWFP**
FEATURES	Maximum Output Current : 1A High Input Voltage : 35V, Built in Over Voltage Protection

○ABSOLUTE MAXIMUM RATINGS(Ta=25℃)

Parameter	Symbol	Limits	Unit
Supply Voltage	Vcc	-0.3 ～ 35 ※1	V
Output Control Voltage	VCTL	-0.3 ～ Vcc	V
Power Dissipation (TO252-5)	Pd	1300 ※2	mW
Operating Temperature Range	Topr	-40～+125	℃
Storage Temperature Range	Tstg	-55～+150	℃
Maximum Junction Temperature	Tjmax	150	℃
Peak Supply Voltage	Vcc peak	50 ※3	V

※1 Do not however exceed Pd.
※2 Derating in done at 10.4mW/℃ for operating above Ta≧25℃.
※3 Bias voltage in 200msec (tr≧1msec). See NOTES FOR USE No.6.

○OPERATING CONDITIONS(Ta=-40～125℃, however do not exceed Pd.)

Parameter	Symbol	Min.	Max.	Unit
Supply Voltage	Vcc	4.0	25.0	V
Output Current	Io	—	1.0	A
Output Voltage	Vo	3	15	V

○PROTECTION(Design Guarantee)

Parameter	Symbol	Min.	Typ.	Max.	Unit
Over Voltage Protection	Vcc	26	28	30	V

NOTE The product described in this specification is a strategic product (and/or service) subject to COCOM regulations. It should not be exported without authorization fromthe appropriate government.
NOTE This product is not designed for normal operation within a radio active environment.

Status of this document
The Japanese version of this document is the formal specification.
A customer may use this translation version only for a reference to help reading the formal version.
If there are any differences in translation version of this document, formal version takes priority.

○ELECTRICAL CHARACTERISTIC

(Unless otherwise specified, Ta=25℃、Vcc=10V、VCTL=5V、Io=500mA)

Parameter	Symbol	Limit			Umit	Conditions
		Min.	Typ.	Max.		
Shut Down Current	Isd	—	0	10	μA	VCTL=0V
Bias Current	Ib	—	2.5	5.0	mA	VCTL=2V, Io=0mA
C Terminal Voltage	Vc	1.200	1.225	1.250	V	Io=50mA
Dropout Voltage	⊿Vd	—	0.3	0.5	V	Vcc=Vo×0.95
Peak Output Current	Io	1.0	—	—	A	
Ripple Rejection	R.R.	45	55	—	dB	f=120Hz, Io=100mA, ein※2=1Vrms
Line Regulation	Reg.I	—	20	100	mV	Vcc=6→25V
Load Regulation	Reg.L	—	50	150	mV	Io=5mA→1A
Temperature Coefficient of Output Current ※1	Tcvo	—	±0.02	—	%/℃	Io=5mA,Tj=0～125℃
Output Short Current	Ios	—	0.40	—	A	Vcc=25V
ON Mode Voltage	VthH	2.0	—	—	V	ACTIVE MODE, Io=0mA
OFF Mode Voltage	VthL	—	—	0.8	V	OFF MODE, Io=0mA
Input High Current	ICTL	100	200	300	μA	VCTL=5V, Io=0mA

※1 Design guarantee.(Outgoing inspection is not done on all products.)

※2 ein : Input Voltage Ripple

○PHYSICAL DIMENSIONS, MARKING

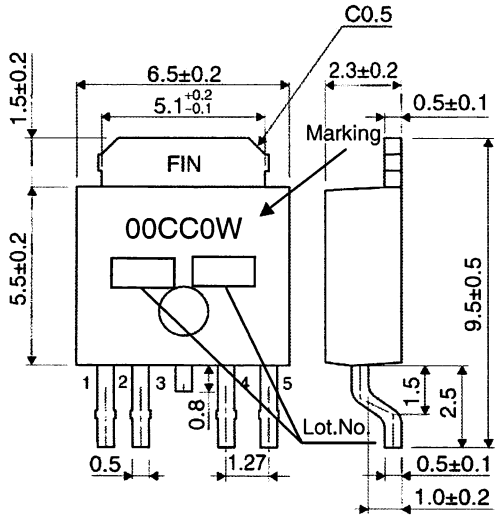

TO252-5 (UNIT : mm)

O BLOCK DIAGRAM

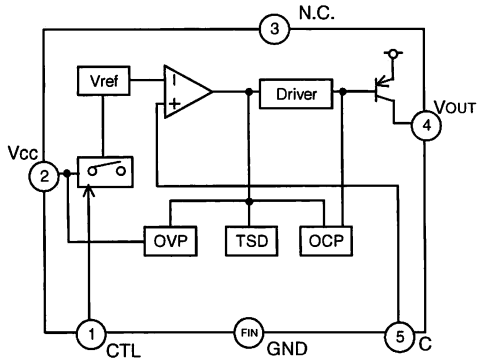

OPIN NO. , PIN NAME

Pin Number	Pin Name
1	CTL
2	Vcc
3	N.C.
4	VOUT
5	C
FIN	GND

※ Please refer to technical note concerning application circuit, and etc.

ONOTES FOR USE

1. Absolute maximum range
   Absolute Maximum Ratings are those values beyond which the life of a device may be destroyed we cannot be defined the failure mode, such as short mode or open mode.
   Therefore physical security countermeasure, like fuse, is to be given when a specific mode to be beyond absolute maximum ratings is considered.

2. GND pin voltage
   GND terminal should be connected the lowest voltage, under all conditions. And all terminals except GND should be under GND terminal voltage under all conditions including transient situations.

3. Power dissipation
   If IC is used on condition that the power loss is over the power dissipation, the reliability will become worse by heat up, such as reduced output current capability.
   Also, be sure to use this IC within a power dissipation range allowing enough of margin.

4. Electrical characteristics described in these specifications may vary, depending on temperature, supply voltage, external circuits and other conditions. Therefore, be sure to check all relevant factors, including transient characteristics.

5. Be sure to connect a capacitor with capacitance of at least 22μF, including temperature characteristics and variation, to prevent oscillation between the Vo and GND. Note that if the capacity of the capacitor changes due to factors such as changes in temperature or ESR, oscillation may occur, and the original characteristics of the IC may not be realized. For example, when a ceramic capacitor is employed, oscillation will be generated because the series resistance is too small. Please take countermeasures to prevent this, such as adding a series resistor. Standard electrolytic capacitors are subject to extremely large capacitance and ESR fluctuations due to temperature conditions. Particularly at low temperature, capacity is decreased, while ESR grows larger, conditions which increase the vulnerability to oscillation. Therefore, be certain to check for the presence of oscillation.
   In respect to the proper ESR range, select a capacitor that meets the conditions in the figure below for stable operation range. Note, however, that the stable range suggested in the figure depends on the IC and the resistance load involved, and can vary with the board's wiring impedance, input impedance, and/or load impedance. Therefore, be certain to ascertain the final status of these items for actual use.
   Keep capacitor capacitance within a range of 22μF～1000μF. It is also recommended that a 0.33μF bypass capacitor be connected as close to the input pin-GND as location possible. However, in situations such as rapid fluctuation of the input voltage or the load, please check the operation in real application to determine proper capacitance.

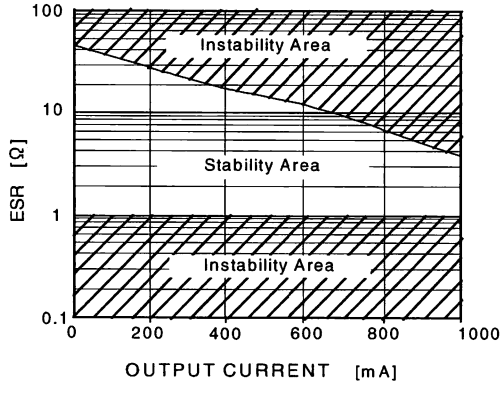

6. Over voltage protection circuit
The over voltage protection is useful for the sharp surge voltage.
(Rise Time: more than 1msec)
If the surge voltage is supplied for a longer time, another protection circuit (ex. power zenner) should be added.

7. Overcurrent protection circuit
The built-in overcurrent protection circuit is designed to respond to the output current and prevent destruction of the IC from load short circuits; however, it is only effective in protecting the IC from destruction in sudden overcurrent accidents. The protection circuit is not to be used continuously, or for transitions. In executing thermal design, bear in mind that overcurrent protection has negative characteristic according with the temperature.

8. Thermal shutdown circuit
A built-in internal shutdown (TSD) circuit is provided to protect the IC from heat destruction. Operation has to be done within the allowable loss range, but in continuous use beyond the range, chip temperature Tj will increase to the threshold, activating the TSD circuit and turning the output power Tr OFF. Once the chip temperature Tj returns to the normal range, the circuit is automatically restored. Note that the TSD circuit is designed to operate over the maximum absolute rating. Therefore, make absolutely certain not to use the TSD function in set design.

9. Mounting Failures
Mounting failure, such as misdirection or mismount, may cause a malfunction in the device.

10. Internal circuits or elements may be damaged when Vcc and pin voltage are reversed. For example, Vcc short circuit to GND while a external capacitor is charged. Output pin capacitor is recommended no larger than 1000μF. In addition, inserting a Vcc series countercurrent prevention diode, or a bypass diode between the various pins and the vcc, is recommended.

11. Malfunction may be happened when the device is used in the strong electromagnetic field.

12. We recommend to put Diode for protection purpose in case of output pin connected with large load of impedance or reserve current occurred at initial and output off.

13. Precautions for board inspection
Connecting low-impedance capacitors to run inspections with the board may produce stress on the IC. Therefore, be certain to use proper discharge procedure before each process of the test operation. To prevent electrostatic accumulation and discharge in the assembly process, thoroughly ground yourself and any equipment that could sustain ESD damage, and continue observing ESD-prevention procedures in all handling, transfer and storage operations. Before attempting to connect components to the test setup, make certain that the power supply is OFF. Likewise, be sure the power supply is OFF before removing any component connected to the test setup.

14. GND pattern
When both a small-signal GND and high current GND are present, single-point grounding (at the set standard point) is recommended, in order to separate the small-signal and high current patterns, and to be sure the voltage change stemming from the wiring resistance and high current does not cause any voltage change in the small-signal GND. In the same way, care must be taken to avoid voltage fluctuations in any connected external component GND.

Notes

- No technical content pages of this document may be reproduced in any form or transmitted by any means without prior permission of ROHM CO.,LTD.
- The contents described herein are subject to change without notice. The specifications for the product described in this document are for reference only. Upon actual use, therefore, please request that specifications to be separately delivered.
- Application circuit diagrams and circuit constants contained herein are shown as examples of standard use and operation. Please pay careful attention to the peripheral conditions when designing circuits and deciding upon circuit constants in the set.
- Any data, including, but not limited to application circuit diagrams information, described herein are intended only as illustrations of such devices and not as the specifications for such devices. ROHM CO.,LTD. disclaims any warranty that any use of such devices shall be free from infringement of any third party's intellectual property rights or other proprietary rights, and further, assumes no liability of whatsoever nature in the event of any such infringement, or arising from or connected with or related to the use of such devices.
- Upon the sale of any such devices, other than for buyer's right to use such devices itself, resell or otherwise dispose of the same, no express or implied right or license to practice or commercially exploit any intellectual property rights or other proprietary rights owned or controlled by
- ROHM CO., LTD. is granted to any such buyer.
- Products listed in this document are no antiradiation design.

The products listed in this document are designed to be used with ordinary electronic equipment or devices (such as audio visual equipment, office-automation equipment, communications devices, electrical appliances and electronic toys).
Should you intend to use these products with equipment or devices which require an extremely high level of reliability and the malfunction of with would directly endanger human life (such as medical instruments, transportation equipment, aerospace machinery, nuclear-reactor controllers, fuel controllers and other safety devices), please be sure to consult with our sales representative in advance.

About Export Control Order in Japan

Products described herein are the objects of controlled goods in Annex 1 (Item 16) of Export Trade Control Order in Japan.
In case of export from Japan, please confirm if it applies to "objective" criteria or an "informed" (by MITI clause) on the basis of "catch all controls for Non-Proliferation of Weapons of Mass Destruction.

Thank you for your accessing to ROHM product informations.

More detail product informations and catalogs are available,

please contact your nearest sales office.

Please contact our sales offices for details ;

U.S.A / San Diego	TEL : +1(858)625-3630	FAX : +1(858)625-3670
Atlanta	TEL : +1(770)754-5972	FAX : +1(770)754-0691
Dallas	TEL : +1(972)312-8818	FAX : +1(972)312-0330
Germany / Dusseldorf	TEL : +49(2154)9210	FAX : +49(2154)921400
United Kingdom / London	TEL : +44(1)908-282-666	FAX : +44(1)908-282-528
France / Paris	TEL : +33(0)1 56 97 30 60	FAX : +33(0) 1 56 97 30 80
China / Hong Kong	TEL : +852(2)740-6262	FAX : +852(2)375-8971
Shanghai	TEL : +86(21)6279-2727	FAX : +86(21)6247-2066
Dilian	TEL : +86(411)8230-8549	FAX : +86(411)8230-8537
Beijing	TEL : +86(10)8525-2483	FAX : +86(10)8525-2489
Taiwan / Taipei	TEL : +866(2)2500-6956	FAX : +866(2)2503-2869
Korea / Seoul	TEL : +82(2)8182-700	FAX : +82(2)8182-715
Singapore	TEL : +65-6332-2322	FAX : +65-6332-5662
Malaysia / Kuala Lumpur	TEL : +60(3)7958-8355	FAX : +60(3)7958-8377
Philippines / Manila	TEL : +63(2)807-6872	FAX : +63(2)809-1422
Thailand / Bangkok	TEL : +66(2)254-4890	FAX : +66(2)256-6334

Japan /
(Internal Sales)

Tokyo 2-1-1, Yaesu, Chuo-ku, Tokyo 104-0082
TEL : +81(3)5203-0321 FAX : +81(3)5203-0300

Yokohama 2-4-8, Shin Yokohama, Kohoku-ku, Yokohama, Kanagawa 222-8575
TEL : +81(45)476-2131 FAX : +81(45)476-2128

Nagoya Dainagayo Building 9F 3-28-12, Meieki, Nakamura-ku, Nagoya,Aichi 450-0002
TEL : +81(52)581-8521 FAX : +81(52)561-2173

Kyoto 579-32 Higashi Shiokouji-cho, Karasuma Nishi-iru, Shiokoujidori, Shimogyo-ku, Kyoto 600-8216
TEL : +81(75)311-2121 FAX : +81(75)314-6559

(Contact address for overseas customers in Japan)

Yokohama TEL : +81(45)476-9270 FAX : +81(045)476-9271

As of 18th. April 2005