LED LIGHT BAR & BAR GRAPH ARRAYS

Digit Size	Part No.		Chip		Absolute Maximum Ratings				Electro-optical Data(At 10mA)			Drawing No.
	Common Anode	Common Cathode	Material/Emitted Color	Peak Wave Length λ p(nm)	Δ λ (nm)	Pd (mw)	If (mA)	Ifp (mA)	Vf (v) Typ.	Vf (v) Max.	Iv. Typ. Per.Seg. (mcd)	
1.78*5.10mm 10Bar Graph Array	BA-10R1UD		GaAsP/Red	655	40	80	40	200	1.7	2.0	1.4	AD-01
	BA-10H1UD		GaP/ Bright Red	700	90	40	15	50	2.2	2.5	2.0	
	BA-10G1UD		GaP/ Green	568	30	80	30	150	2.2	2.5	5.0	
	BA-10Y1UD		GaAsP/GaP/ Yellow	585	35	80	30	150	2.1	2.5	4.5	
	BA-10E1UD		GaAsP/GaP/ Hi-Eff.Red	635	45	80	30	150	2.0	2.5	5.0	
			GaAsP/GaP/ Orange									
	BA-10S1UD		GaAlAs/ SH Super Red	660	20	80	30	150	1.7	2.5	8.0	
	BA-10D1UD		GaAlAs/ DH Super Red	660	20	80	30	150	1.7	2.5	9.0	
1.70*5.00mm 5Bar Graph Array	BA-5R5UD		GaAsP/Red	655	40	80	40	200	1.7	2.0	1.4	AD-02
	BA-5H5UD		GaP/ Bright Red	700	90	40	15	50	2.2	2.5	2.0	
	BA-5G5UD		GaP/ Green	568	30	80	30	150	2.2	2.5	5.0	
	BA-5Y5UD		GaAsP/GaP/ Yellow	585	35	80	30	150	2.1	2.5	4.5	
	BA-5E5UD		GaAsP/GaP/ Hi-Eff.Red	635	45	80	30	150	2.0	2.5	5.0	
			GaAsP/GaP/ Orange									
	BA-5S5UD		GaAlAs/ SH Super Red	660	20	80	30	150	1.7	2.5	8.0	
	BA-5D5UD		GaAlAs/ DH Super Red	660	20	80	30	150	1.7	2.5	9.0	
1.50*4.00mm 12Bar Graph Array	BA-12R3UD		GaAsP/Red	655	40	80	40	200	1.7	2.0	1.2	AD-03
	BA-12H3UD		GaP/ Bright Red	700	90	40	15	50	2.2	2.5	1.8	
	BA-12G3UD		GaP/ Green	568	30	80	30	150	2.2	2.5	4.5	
	BA-12Y3UD		GaAsP/GaP/ Yellow	585	35	80	30	150	2.1	2.5	3.5	
	BA-12E3UD		GaAsP/GaP/ Hi-Eff.Red	635	45	80	30	150	2.0	2.5	4.5	
			GaAsP/GaP/ Orange									
	BA-12S3UD		GaAlAs/ SH Super Red	660	20	80	30	150	1.7	2.5	10.0	
	BA-12D3UD		GaAlAs/ DH Super Red	660	20	80	30	150	1.7	2.5	12.0	
	BA-12R3UD-A		GaAsP/Red	655	40	80	40	200	1.7	2.0	1.2	AD-04
	BA-12H3UD-A		GaP/ Bright Red	700	90	40	15	50	2.2	2.5	1.8	
	BA-12G3UD-A		GaP/ Green	568	30	80	30	150	2.2	2.5	4.5	
	BA-12Y3UD-A		GaAsP/GaP/ Yellow	585	35	80	30	150	2.1	2.5	3.5	
	BA-12E3UD-A		GaAsP/GaP/ Hi-Eff.Red	635	45	80	30	150	2.0	2.5	4.5	
			GaAsP/GaP/ Orange									
	BA-12S3UD-A		GaAlAs/ SH Super Red	660	20	80	30	150	1.7	2.5	10.0	
	BA-12D3UD-A		GaAlAs/ DH Super Red	660	20	80	30	150	1.7	2.5	12.0	
2.50*7.00mm 9Bar Graph Array	BA-9R4AD	BA-9R4CD	GaAsP/Red	655	40	80	40	200	1.7	2.0	1.2	AD-05
	BA-9H4AD	BA-9H4CD	GaP/ Bright Red	700	90	40	15	50	2.2	2.5	1.8	
	BA-9G4AD	BA-9G4CD	GaP/ Green	568	30	80	30	150	2.2	2.5	4.5	
	BA-9Y4AD	BA-9Y4CD	GaAsP/GaP/ Yellow	585	35	80	30	150	2.1	2.5	3.5	
	BA-9E4AD	BA-9E4CD	GaAsP/GaP/ Hi-Eff.Red	635	45	80	30	150	2.0	2.5	4.5	
			GaAsP/GaP/ Orange									
	BA-9S4AD	BA-9S4CD	GaAlAs/ SH Super Red	660	20	80	30	150	1.7	2.5	10.0	
	BA-9D4AD	BA-9D4CD	GaAlAs/ DH Super Red	660	20	80	30	150	1.7	2.5	12.0	
1.78*5.10mm 15Bar Graph Array	BA-15R15UD		GaAsP/Red	655	40	80	40	200	1.7	2.0	1.2	AD-06
	BA-15H15UD		GaP/ Bright Red	700	90	40	15	50	2.2	2.5	1.8	
	BA-15G15UD		GaP/ Green	568	30	80	30	150	2.2	2.5	4.5	
	BA-15Y15UD		GaAsP/GaP/ Yellow	585	35	80	30	150	2.1	2.5	3.5	
	BA-15E15UD		GaAsP/GaP/ Hi-Eff.Red	635	45	80	30	150	2.0	2.5	4.5	
			GaAsP/GaP/ Orange									
	BA-15S15UD		GaAlAs/ SH Super Red	660	20	80	30	150	1.7	2.5	10.0	
	BA-15D15UD		GaAlAs/ DH Super Red	660	20	80	30	150	1.7	2.5	12.0	

LED LIGHT BAR & BAR GRAPH ARRAYS

AD-01 BA- 10x1UD

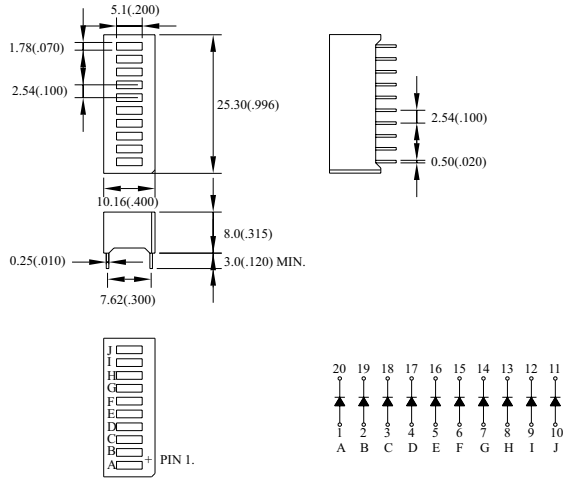

AD-02 BA- 5x5UD

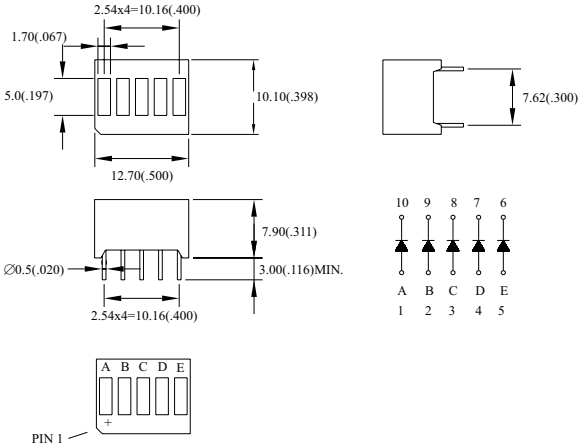

AD-03 BA- 12x3UD

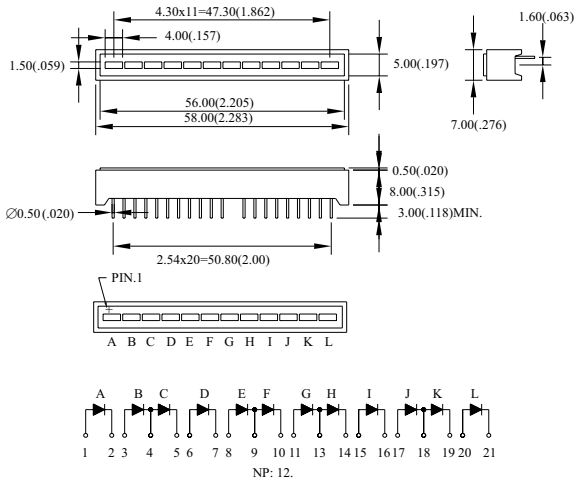

AD-04 BA- 12x3UD-A

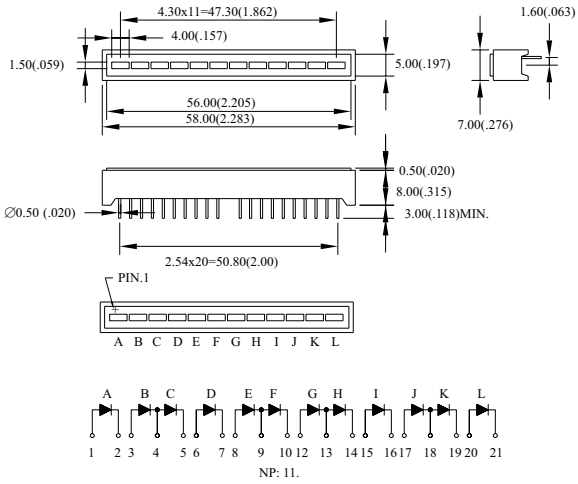

AD-05 BA-9x4$^{A}_{C}$D

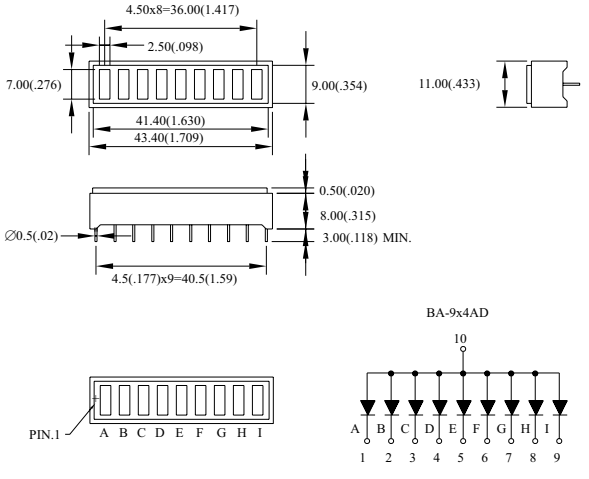

AD-06 BA- 15x15UD

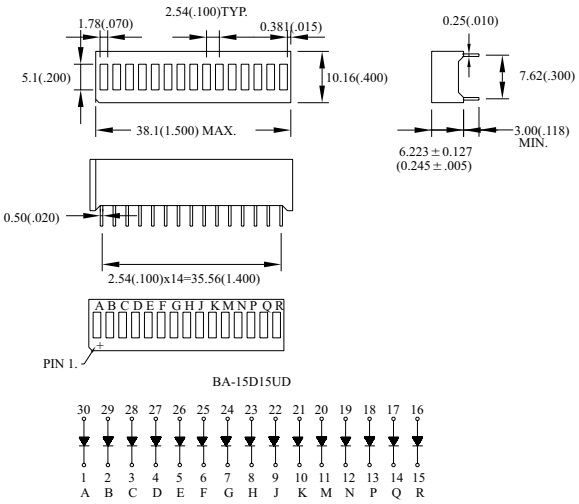

NOTES: 1.All Dimensions are in millimeters(inches). 2.Tolerance is ± 0.25mm(.010″).
3.Specifications are subject to change without notice. 4.NP:No Pin. 5.NC:No Connect.