Inductor Data Sheet

#B966AS-160M=P3

In Production | General | 85℃ | Wound (Ferrite) | RoHS | REACH

< List of part numbers with package codes >
#B966AS-160M=P3

Shape

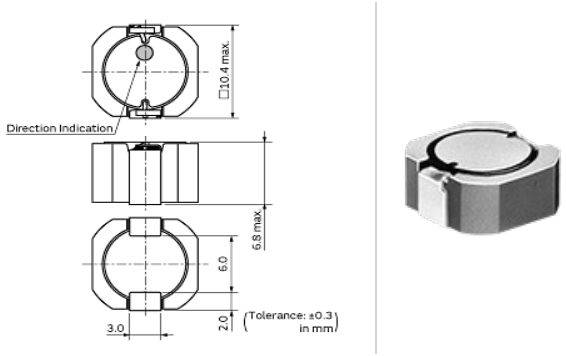

L size	10.1 ±0.3mm
W size	10.1 ±0.3mm
T size	6.8 mm
Size code in inch (mm)	4040 (101101)

Notes

Rated current (Isat) is specified when the decrease of the initial inductance value at 10%. (The ambient reference temperature is 20℃.)
Rated current (Itemp) is specified when temperature of inductor the is raised 40℃ by DC current. (The ambient reference temperature is 20℃.)

References

Packaging code	Specifications	Minimum quantity
=P3	ϕ330mm Embossed taping	500

Mass (Typ.)	
1 piece	2.575g

Specifications

Inductance	16μH ±20%
Inductance test frequency	0.1MHz
Rated current (Isat) (Based on Inductance change)	3300mA
Rated current (Itemp) (Based on Temperature rise)	2700mA
Max. of DC resistance	0.060Ω
Operating temperature range (Self-temperature rise is included)	-40～85℃
Class of magnetic shield	Ferrite Core
Series	DS106C2

Attention

1.This datasheet is downloaded from the website of Murata Manufacturing Co., Ltd. Therefore, it's specifications are subject to change or our products in it may be discontinued without advance notice. Please check with our sales representatives or product engineers before ordering.
2.This datasheet has only typical specifications because there is no space for detailed specifications.
Therefore, please review our product specifications or consult the approval sheet for product specifications before ordering.

Chart of characteristic data (The charts below may show another part number which shares its characteristics.)

- Inductance-Current characteristics (Typ.)

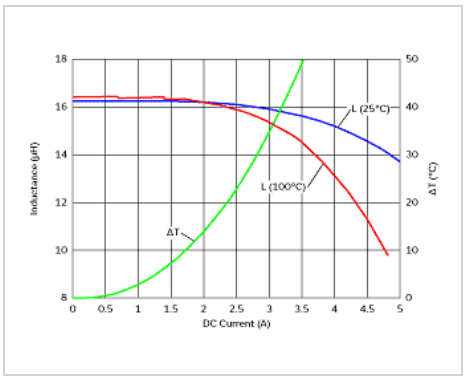

- Temperature rise characteristics (Typ.)

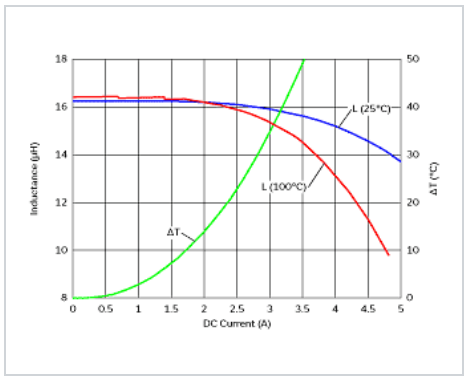

Attention

1.This datasheet is downloaded from the website of Murata Manufacturing Co., Ltd. Therefore, it's specifications are subject to change or our products in it may be discontinued without advance notice. Please check with our sales representatives or product engineers before ordering.
2.This datasheet has only typical specifications because there is no space for detailed specifications.
Therefore, please review our product specifications or consult the approval sheet for product specifications before ordering.