SMT inductors

SIMID series, SIMID 1812-T

Series/Type: **B82432T**

Date: October 2012

© EPCOS AG 2012. Reproduction, publication and dissemination of this publication, enclosures hereto and the information contained therein without EPCOS' prior express consent is prohibited.

SMD

Size 1812 (EIA) or 4532 (IEC)
Rated inductance 1 ... 1000 µH
Rated current 70 ... 1300 mA



Construction

- Upright ferrite drum core
- Laser-welded winding
- Flame-retardant molding

Features

- Temperature range up to +150 °C
- High current handling capability
- Qualified to AEC-Q200
- Suitable for lead-free reflow soldering as referenced in JEDEC J-STD 020D
- RoHS-compatible

Applications

- Filtering of supply voltages, coupling, decoupling
- DC/DC converters
- Automotive electronics (e.g. single-wire bus systems)
- Telecommunications
- Industrial electronics

Terminals

- Base material CuSn6
- Layer composition Cu, Ag, Sn (lead-free)[1)]
- Electro-plated

Marking

- Marking on component:
  Manufacturer and letter “T”,
  L value (in µH), tolerance of L value (coded),
  date of manufacture (YWWD)
- Minimum data on reel:
  Manufacturer, ordering code, L value, quantity, date of packing

Delivery mode and packing unit

- 12-mm blister tape, wound on 330-mm ∅ reel
- Packing unit: 2500 pcs./reel

1) Ni-barrier-plated terminals on request (B82432T*50).

SMD

Dimensional drawing and layout recommendation

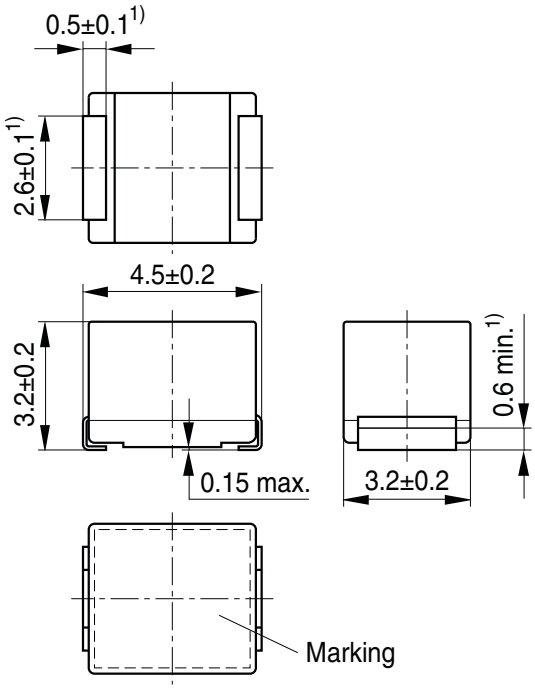

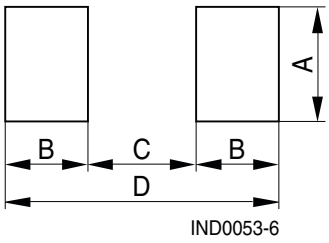

A	B	C	D
3.6	1.3	3.2	5.8

1) Soldering area IND0083-T-E

Dimensions in mm

Taping and packing

Blister tape

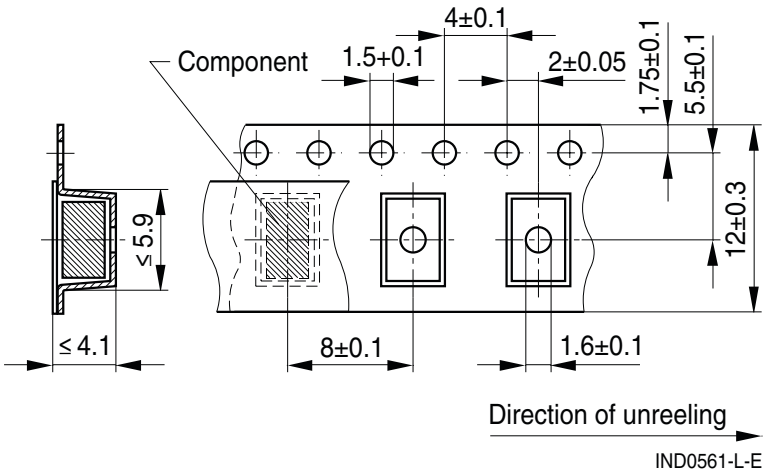

Reel

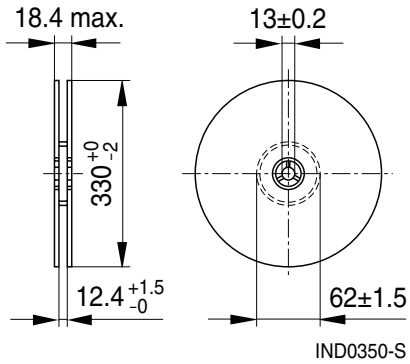

Dimensions in mm

Technical data and measuring conditions

Rated inductance L_R	Measured with impedance analyzer Agilent 4294A at frequency f_L, 0.1 V, +20 °C
Q factor Q_{min}	Measured with impedance analyzer Agilent 4294A at frequency f_Q, +20 °C
Rated temperature T_R	+85 °C
Rated current I_R	Maximum permissible DC with inductance decrease $\Delta L/L_0 \leq 10\%$ and temperature increase of ≤ 40 K at rated temperature
Self-resonance frequency $f_{res,min}$	Measured with impedance analyzer Agilent E4991A, +20 °C
DC resistance R_{max}	Measured at +20 °C
Solderability (lead-free)	Sn95.5Ag3.8Cu0.7: +(245 ±5) °C, (5 ±0.3) s Wetting of soldering area ≥ 90% (based on IEC 60068-2-58)
Resistance to soldering heat	+260 °C, 40 s (as referenced in JEDEC J-STD 020D)
Climatic category	55/150/56 (to IEC 60068-1)
Storage conditions	Mounted: –55 °C … +150 °C Packaged: –25 °C … +40 °C, ≤ 75% RH
Weight	Approx. 130 mg

Characteristics and ordering codes

L_R µH	Tolerance	Q_{min}	f_L; f_Q MHz	I_R mA	R_{max} Ω	$f_{res,min}$ MHz	Ordering code[1)]
1.0	±10% ≙ K	10	7.96	1300	0.08	110	B82432T1102K000
1.2		10	7.96	1200	0.10	100	B82432T1122K000
1.5		10	7.96	1150	0.11	80	B82432T1152K000
1.8		10	7.96	1050	0.13	70	B82432T1182K000
2.2		10	7.96	1000	0.15	60	B82432T1222K000
2.7		10	7.96	950	0.17	55	B82432T1272K000
3.3		10	7.96	900	0.19	50	B82432T1332K000
3.9		10	7.96	850	0.20	45	B82432T1392K000
4.7		10	7.96	800	0.22	40	B82432T1472K000
5.6		10	7.96	750	0.26	38	B82432T1562K000
6.8		10	7.96	700	0.30	36	B82432T1682K000
8.2		10	7.96	670	0.33	30	B82432T1822K000

→

1) For Ni-barrier-plated terminals replace the last two digits “00” by “50”.

SMD

Characteristics and ordering codes

L_R µH	Tolerance	Q_{min}	f_L; f_Q MHz	I_R mA	R_{max} Ω	$f_{res,min}$ MHz	Ordering code[1)]
10	± 10 % ≙ K	10	2.52	650	0.35	25	B82432T1103K000
12		10	2.52	630	0.45	23	B82432T1123K000
15		10	2.52	600	0.50	20	B82432T1153K000
18		10	2.52	550	0.60	18	B82432T1183K000
22		10	2.52	450	0.70	15	B82432T1223K000
27		10	2.52	430	1.00	14	B82432T1273K000
33		10	2.52	400	1.20	13	B82432T1333K000
39		10	2.52	380	1.30	12	B82432T1393K000
47		10	2.52	350	1.35	11	B82432T1473K000
56		10	2.52	300	2.00	10	B82432T1563K000
68		10	2.52	250	2.50	8.0	B82432T1683K000
82		10	2.52	220	3.00	7.0	B82432T1823K000
100		20	0.796	200	3.50	6.5	B82432T1104K000
120		20	0.796	180	4.50	6.3	B82432T1124K000
150		20	0.796	160	6.00	6.1	B82432T1154K000
180		20	0.796	140	7.00	5.5	B82432T1184K000
220		20	0.796	130	7.50	4.5	B82432T1224K000
270		20	0.796	120	10.5	4.3	B82432T1274K000
330		20	0.796	120	11.0	4.1	B82432T1334K000
390		20	0.796	110	13.0	3.9	B82432T1394K000
470		20	0.796	100	15.0	3.5	B82432T1474K000
560		20	0.796	90	20.0	3.0	B82432T1564K000
680		20	0.796	80	23.0	2.6	B82432T1684K000
820		20	0.796	80	27.0	2.4	B82432T1824K000
1000		20	0.252	70	30.0	2.3	B82432T1105K000

Closer tolerances on request.
Higher currents possible at temperatures $<T_R$ on request.

Sample kit available. Ordering code: B82432X001
For more information refer to chapter “Sample kits”.

1) For Ni-barrier-plated terminals replace the last two digits of ordering code “00” by “50”.

SMD

Impedance |Z| versus frequency f
measured with impedance analyzer Agilent E4991A, typical values at +20 °C

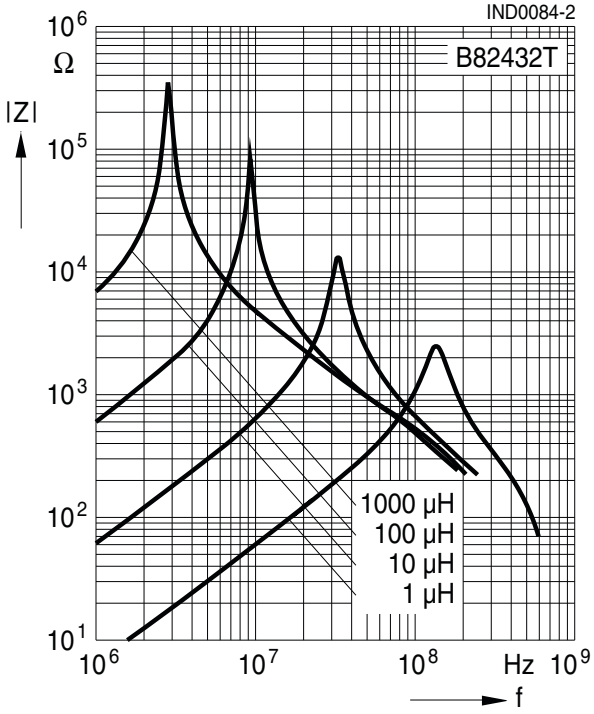

Inductance L versus DC load current I_{DC}
measured with LCR meter Agilent 4285A, typical values at +20 °C

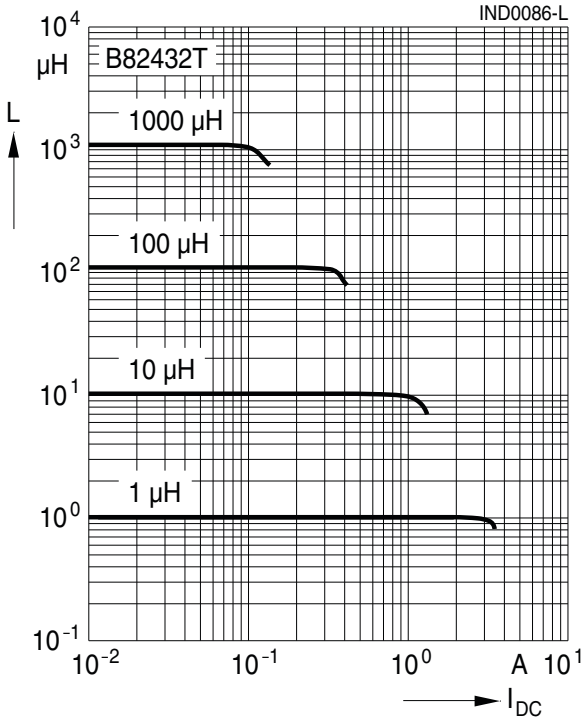

Q factor versus frequency f
measured with impedance analyzer Agilent E4991A, typical values at +20 °C

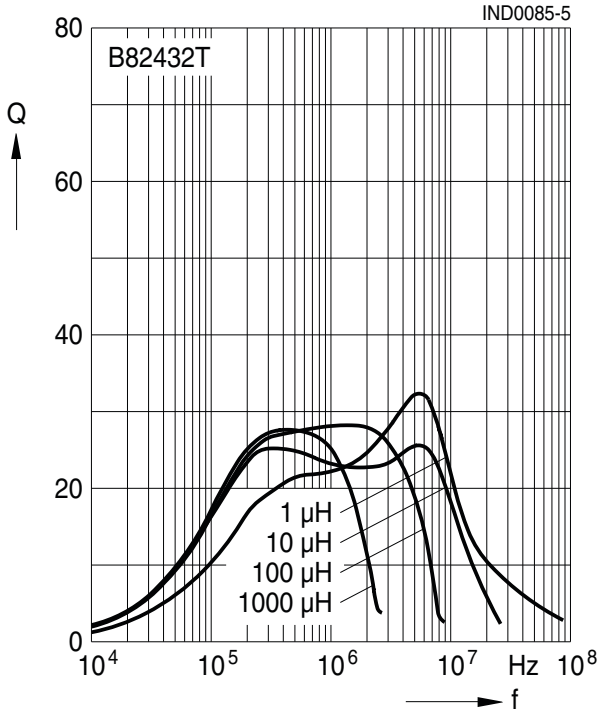

Current derating I_{op}/I_R versus ambient temperature T_A
(rated temperature T_R = +85 °C)

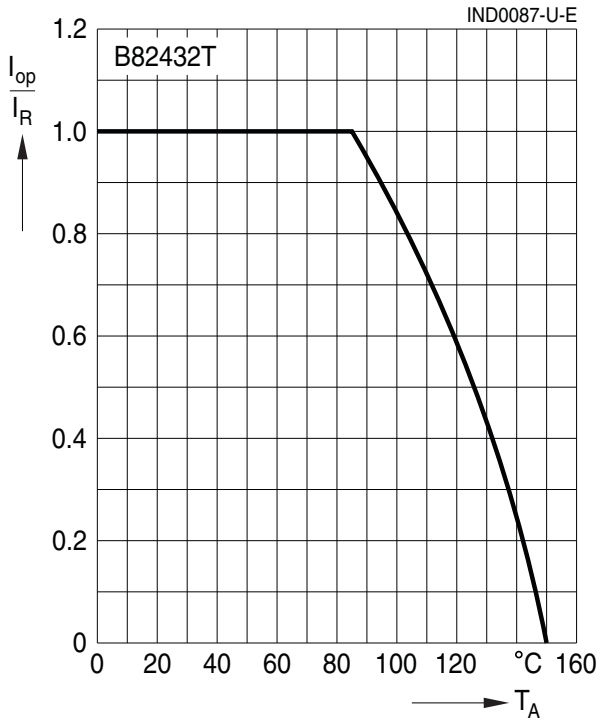

Cautions and warnings

- Please note the recommendations in our Inductors data book (latest edition) and in the data sheets.
  - Particular attention should be paid to the derating curves given there.
  - The soldering conditions should also be observed. Temperatures quoted in relation to wave soldering refer to the pin, not the housing.
- If the components are to be washed varnished it is necessary to check whether the washing varnish agent that is used has a negative effect on the wire insulation, any plastics that are used, or on glued joints. In particular, it is possible for washing varnish agent residues to have a negative effect in the long-term on wire insulation.
  Washing processes may damage the product due to the possible static or cyclic mechanical loads (e.g. ultrasonic cleaning). They may cause cracks to develop on the product and its parts, which might lead to reduced reliability or lifetime.
- The following points must be observed if the components are potted in customer applications:
  - Many potting materials shrink as they harden. They therefore exert a pressure on the plastic housing or core. This pressure can have a deleterious effect on electrical properties, and in extreme cases can damage the core or plastic housing mechanically.
  - It is necessary to check whether the potting material used attacks or destroys the wire insulation, plastics or glue.
  - The effect of the potting material can change the high-frequency behaviour of the components.
- Ferrites are sensitive to direct impact. This can cause the core material to flake, or lead to breakage of the core.
- Even for customer-specific products, conclusive validation of the component in the circuit can only be carried out by the customer.

Important notes

The following applies to all products named in this publication:

1. Some parts of this publication contain **statements about the suitability of our products for certain areas of application**. These statements are based on our knowledge of typical requirements that are often placed on our products in the areas of application concerned. We nevertheless expressly point out **that such statements cannot be regarded as binding statements about the suitability of our products for a particular customer application.** As a rule, EPCOS is either unfamiliar with individual customer applications or less familiar with them than the customers themselves. For these reasons, it is always ultimately incumbent on the customer to check and decide whether an EPCOS product with the properties described in the product specification is suitable for use in a particular customer application.

2. We also point out that **in individual cases, a malfunction of electronic components or failure before the end of their usual service life cannot be completely ruled out in the current state of the art, even if they are operated as specified.** In customer applications requiring a very high level of operational safety and especially in customer applications in which the malfunction or failure of an electronic component could endanger human life or health (e.g. in accident prevention or life-saving systems), it must therefore be ensured by means of suitable design of the customer application or other action taken by the customer (e.g. installation of protective circuitry or redundancy) that no injury or damage is sustained by third parties in the event of malfunction or failure of an electronic component.

3. **The warnings, cautions and product-specific notes must be observed**.

4. In order to satisfy certain technical requirements, **some of the products described in this publication may contain substances subject to restrictions in certain jurisdictions (e.g. because they are classed as hazardous)**. Useful information on this will be found in our Material Data Sheets on the Internet (www.epcos.com/material). Should you have any more detailed questions, please contact our sales offices.

5. We constantly strive to improve our products. Consequently, **the products described in this publication may change from time to time**. The same is true of the corresponding product specifications. Please check therefore to what extent product descriptions and specifications contained in this publication are still applicable before or when you place an order.

   We also **reserve the right to discontinue production and delivery of products**. Consequently, we cannot guarantee that all products named in this publication will always be available. The aforementioned does not apply in the case of individual agreements deviating from the foregoing for customer-specific products.

6. Unless otherwise agreed in individual contracts, **all orders are subject to the current version of the "General Terms of Delivery for Products and Services in the Electrical Industry" published by the German Electrical and Electronics Industry Association (ZVEI)**.

7. The trade names EPCOS, BAOKE, Alu-X, CeraDiode, CeraLink, CSMP, CSSP, CTVS, DeltaCap, DigiSiMic, DSSP, FilterCap, FormFit, MiniBlue, MiniCell, MKD, MKK, MLSC, MotorCap, PCC, PhaseCap, PhaseCube, PhaseMod, PhiCap, SIFERRIT, SIFI, SIKOREL, SilverCap, SIMDAD, SiMic, SIMID, SineFormer, SIOV, SIP5D, SIP5K, ThermoFuse, WindCap are **trademarks registered or pending** in Europe and in other countries. Further information will be found on the Internet at www.epcos.com/trademarks.