SMD transformer for ultrasonic sensors

E 5 series

Series/Type:	**B78302**
Ordering code:	**B78302A*A003**
Date:	July 2022

© TDK Electronics AG 2022. Reproduction, publication and dissemination of this publication, enclosures hereto and the information contained therein without TDK Electronics' prior express consent is prohibited.

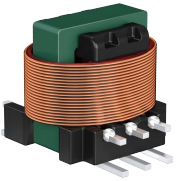

Construction

- Ferrite core
- E 5 SMD type
- Protection for optimized EMC-behavior
- 7 U-shape terminals

Applications

- Ultrasonic Sensor
- Ultrasonic Park Assist
- Industrial distance measuring
- Robotics

Features

- Qualification: AEC-Q200
- Resistance to reflow soldering heat in accordance to JEDEC J-STD-020E with T_{peak} = +245 °C
- MSL level 1
- RoHS compatible

Marking

- Middle block of ordering code, date code

Delivery mode and packing units

- Blister tape
- Packing unit: 1000 pcs. per reel

Dimensional drawing

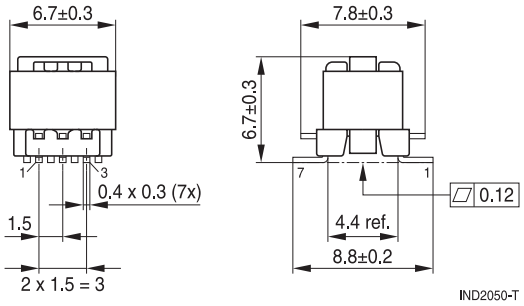

Schematic

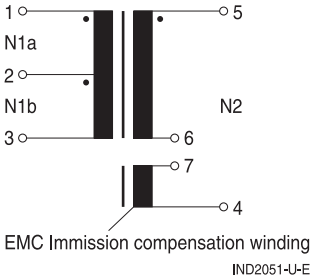

Recommended PCB layout (Top View)

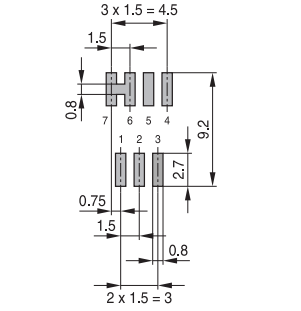

Blister tape

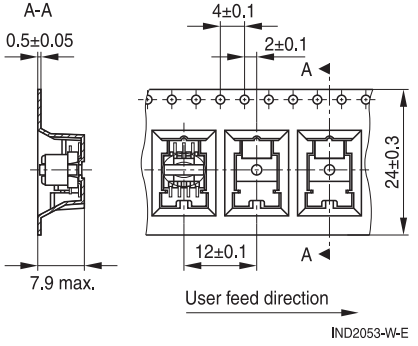

Reel

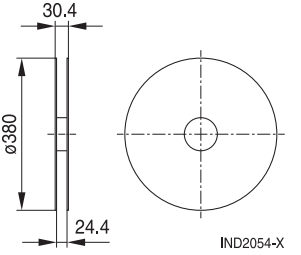

Dimensions in [mm] / all dimensions without tolerances are typical values.

Technical data and measuring conditions

Specified at +25 °C if not mentioned otherwise / all values without tolerances are typical values

Inductance L (4 – 5)[1) 2) 3)] mH	Turns ratio $N_{1a} : N_{1b} : N_2$	R_{DC} N_{1a} / N_{1b} Ω	R_{DC} N_2 Ω	Operating frequency kHz	Ordering code
2 ±8%	1 : 1 : 10.8	1.1 / 1.1	21	50	B78302A2401A003
3 ±8%	1 : 1 : 11	1.4 / 1.4	26	50	B78302A2402A003
4 ±8%	1 : 1 : 15.3	1.1 / 1.1	32	50	B78302A2403A003

High Voltage test (N_{1a}, N_{1b}) / N_2 (f = 50 Hz, t = 1s)	200 V_{RMS}
Weight	appr. 0.6 g
Operating temperature range (component)	–40 °C ...+125 °C

1) Secondary Winding N_2 with added EMC / Immission compensation winding via Pins 4 and 5.
2) Connect Pins 6 and 7 on PCB for the use of the EMC / Immission compensation winding.
3) Inductance test conditions: V = 100 mV, f = 50 kHz.

Cautions and warnings

- Please note the recommendations in our Inductors data book (latest edition) and in the data sheets.
  - Particular attention should be paid to the derating curves given there.
  - The soldering conditions should also be observed. Temperatures quoted in relation to wave soldering refer to the pin, not the housing.
- If the components are to be washed varnished it is necessary to check whether the washing varnish agent that is used has a negative effect on the wire insulation, any plastics that are used, or on glued joints. In particular, it is possible for washing varnish agent residues to have a negative effect in the long-term on wire insulation.
  Washing processes may damage the product due to the possible static or cyclic mechanical loads (e.g. ultrasonic cleaning). They may cause cracks to develop on the product and its parts, which might lead to reduced reliability or lifetime.
- The following points must be observed if the components are potted in customer applications:
  - Many potting materials shrink as they harden. They therefore exert a pressure on the plastic housing or core. This pressure can have a deleterious effect on electrical properties, and in extreme cases can damage the core or plastic housing mechanically.
  - It is necessary to check whether the potting material used attacks or destroys the wire, wire insulation, plastics or glue.
  - The effect of the potting material can change the high-frequency behaviour of the components.
  - Many coating materials have a negative effect (chemically and mechanically) on the winding wires, insulation materials and connecting points. Customers are always obligated to determine whether and to what extent their coating materials influence the component.
    Customers are responsible and bear all risk for the use of the coating material. TDK Electronics does not assume any liability for failures of our components that are caused by the coating material.
- Ceramics / ferrites are sensitive to direct impact. This can cause the core material to flake, or lead to breakage of the core.
- Even for customer-specific products, conclusive validation of the component in the circuit can only be carried out by the customer.

Display of ordering codes for TDK Electronics products

The ordering code for one and the same product can be represented differently in data sheets, data books, other publications, on the company website, or in order-related documents such as shipping notes, order confirmations and product labels. **The varying representations of the ordering codes are due to different processes employed and do not affect the specifications of the respective products**. Detailed information can be found on the Internet under www.tdk-electronics.tdk.com/orderingcodes.

Important notes

The following applies to all products named in this publication:

1. Some parts of this publication contain **statements about the suitability of our products for certain areas of application**. These statements are based on our knowledge of typical requirements that are often placed on our products in the areas of application concerned. We nevertheless expressly point out **that such statements cannot be regarded as binding statements about the suitability of our products for a particular customer application.** As a rule, we are either unfamiliar with individual customer applications or less familiar with them than the customers themselves. For these reasons, it is always ultimately incumbent on the customer to check and decide whether a product with the properties described in the product specification is suitable for use in a particular customer application.
2. We also point out that **in individual cases, a malfunction of electronic components or failure before the end of their usual service life cannot be completely ruled out in the current state of the art, even if they are operated as specified.** In customer applications requiring a very high level of operational safety and especially in customer applications in which the malfunction or failure of an electronic component could endanger human life or health (e.g. in accident prevention or life-saving systems), it must therefore be ensured by means of suitable design of the customer application or other action taken by the customer (e.g. installation of protective circuitry or redundancy) that no injury or damage is sustained by third parties in the event of malfunction or failure of an electronic component.
3. **The warnings, cautions and product-specific notes must be observed**.
4. In order to satisfy certain technical requirements, **some of the products described in this publication may contain substances subject to restrictions in certain jurisdictions (e.g. because they are classed as hazardous)**. Useful information on this will be found in our Material Data Sheets on the Internet (www.tdk-electronics.tdk.com/material). Should you have any more detailed questions, please contact our sales offices.
5. We constantly strive to improve our products. Consequently, **the products described in this publication may change from time to time**. The same is true of the corresponding product specifications. Please check therefore to what extent product descriptions and specifications contained in this publication are still applicable before or when you place an order.
   We also **reserve the right to discontinue production and delivery of products**. Consequently, we cannot guarantee that all products named in this publication will always be available. The aforementioned does not apply in the case of individual agreements deviating from the foregoing for customer-specific products.
6. Unless otherwise agreed in individual contracts, **all orders are subject to our General Terms and Conditions of Supply**.

Important notes

7. **Our manufacturing sites serving the automotive business apply the IATF 16949 standard**. The IATF certifications confirm our compliance with requirements regarding the quality management system in the automotive industry. Referring to customer requirements and customer specific requirements ("CSR") TDK always has and will continue to have the policy of respecting individual agreements. Even if IATF 16949 may appear to support the acceptance of unilateral requirements, we hereby like to emphasize that **only requirements mutually agreed upon can and will be implemented in our Quality Management System.** For clarification purposes we like to point out that obligations from IATF 16949 shall only become legally binding if individually agreed upon.
8. The trade names EPCOS, CarXield, CeraCharge, CeraDiode, CeraLink, CeraPad, CeraPlas, CSMP, CTVS, DeltaCap, DigiSiMic, ExoCore, FilterCap, FormFit, LeaXield, MiniBlue, MiniCell, MKD, MKK, ModCap, MotorCap, PCC, PhaseCap, PhaseCube, PhaseMod, PhiCap, PowerHap, PQSine, PQvar, SIFERRIT, SIFI, SIKOREL, SilverCap, SIMDAD, SiMic, SIMID, SineFormer, SIOV, ThermoFuse, WindCap, XieldCap are **trademarks registered or pending** in Europe and in other countries. Further information will be found on the Internet at www.tdk-electronics.tdk.com/trademarks.

Release 2020-06