B370 - B3100

3.0A HIGH VOLTAGE SCHOTTKY BARRIER RECTIFIER

Features

- Guard Ring Die Construction for Transient Protection
- Low Power Loss, High Efficiency
- Surge Overload Rating to 100A Peak
- For Use in Low Voltage, High Frequency Inverters, Free Wheeling, and Polarity Protection Application
- **Lead Free Finish/RoHS Compliant (Note 2)**

Mechanical Data

- Case: SMC
- Case Material: Molded Plastic. UL Flammability Classification Rating 94V-0
- Moisture Sensitivity: Level 1 per J-STD-020C
- Terminals: Lead Free Plating (Matte Tin Finish). Solderable per MIL-STD-202, Method 208 (e3)
- Polarity: Cathode Band or Cathode Notch
- Marking Information: See Page 3
- Ordering Information: See Page 3
- Weight: 0.21 grams (approximate)

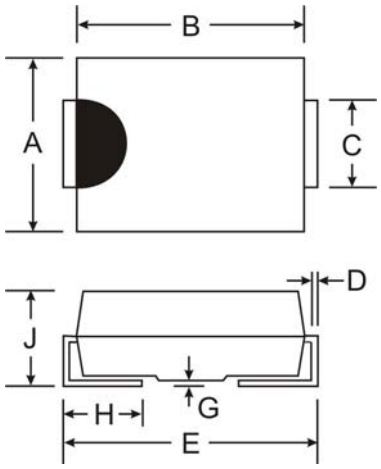

SMC		
Dim	**Min**	**Max**
A	5.59	6.22
B	6.60	7.11
C	2.75	3.18
D	0.15	0.31
E	7.75	8.13
G	0.10	0.20
H	0.76	1.52
J	2.00	2.62
All Dimensions in mm		

Maximum Ratings and Electrical Characteristics @T_A = 25°C unless otherwise specified

Single phase, half wave, 60Hz, resistive or inductive load.
For capacitive load, derate current by 20%.

Characteristic	Symbol	B370	B380	B390	B3100	Unit
Peak Repetitive Reverse Voltage Working Peak Reverse Voltage DC Blocking Voltage	V_{RRM} V_{RWM} V_R	70	80	90	100	V
RMS Reverse Voltage	$V_{R(RMS)}$	49	56	63	70	V
Average Rectified Output Current @ T_T = 90°C	I_O	3.0				A
Non-Repetitive Peak Forward Surge Current 8.3ms single half sine-wave superimposed on rated load	I_{FSM}	100				A
Forward Voltage @ I_F = 3.0A @ T_A = 25°C @ T_A = 100°C	V_{FM}	0.79 0.69				V
Peak Reverse Current @ T_A = 25°C at Rated DC Blocking Voltage @ T_A = 100°C	I_{RM}	0.5 20				mA
Typical Total Capacitance (Note 1)	C_T	100				pF
Typical Thermal Resistance Junction to Terminal	$R_{\theta JT}$	10				°C/W
Operating Temperature Range	T_j	-55 to +125				°C
Storage Temperature Range	T_{STG}	-55 to +150				°C

Notes: 1. Measured at 1.0MHz and Applied Reverse Voltage of 4.0V DC.
2. RoHS revision 13.2.2003. High Temperature Solder Exemption Applied, see *EU Directive Annex Note 7.*

© Diodes Incorporated

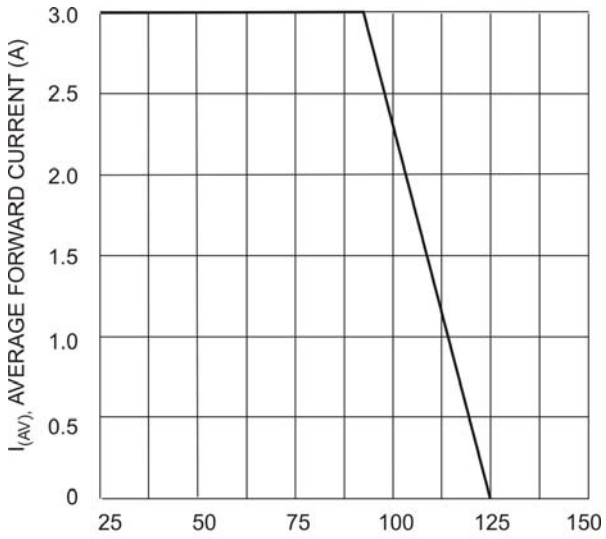

Fig. 1 Forward Current Derating Curve

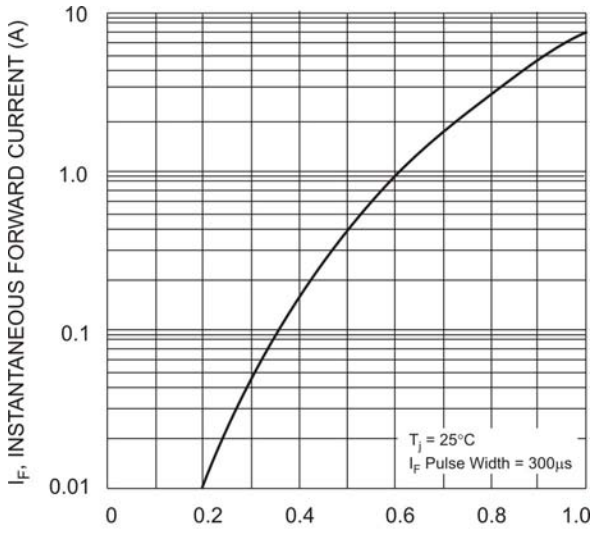

Fig. 2 Typical Forward Characteristics

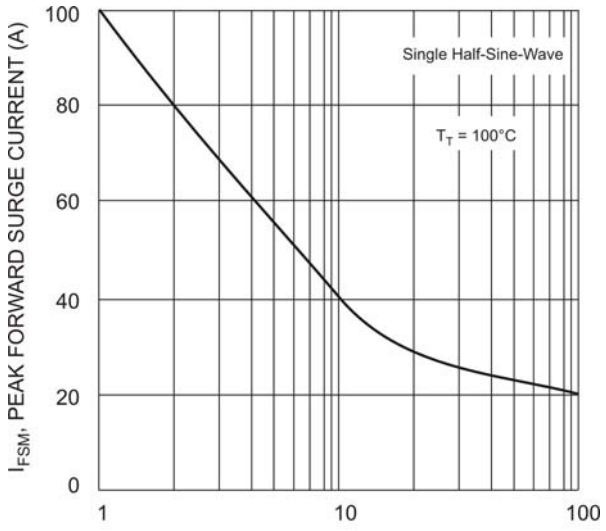

Fig. 3 Max Non-Repetitive Peak Forward Surge Current

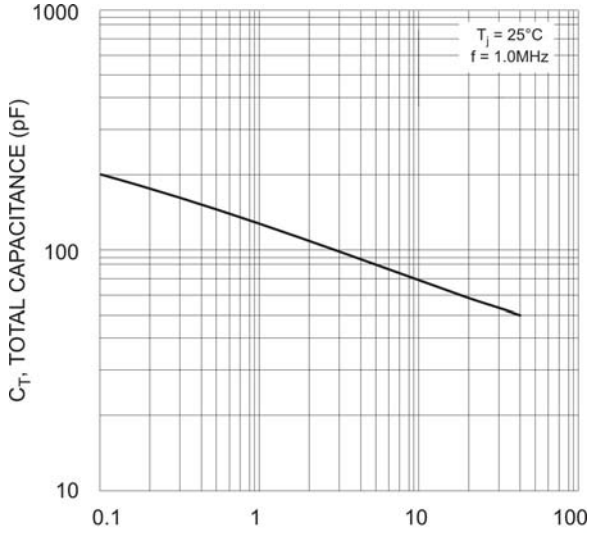

Fig. 4 Typical Total Capacitance

© Diodes Incorporated

Ordering Information (Note 3)

Device*	Packaging	Shipping
B3x0-13-F	SMC	3000/Tape & Reel

* x = Device type, e.g. B380-13-F (SMC package).

Notes: 3. For Packaging Details, go to our website at http://www.diodes.com/datasheets/ap02007.pdf.

Marking Information

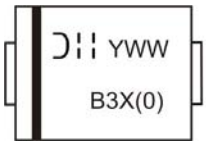

B3X0 = Product type marking code, ex: B380 (SMC package)
= Manufacturers' code marking
YWW = Date code marking
Y = Last digit of year ex: 2 for 2002
WW = Week code 01 to 52
Note: B3100 marking code is B310

IMPORTANT NOTICE

Diodes Incorporated and its subsidiaries reserve the right to make modifications, enhancements, improvements, corrections or other changes without further notice to any product herein. Diodes Incorporated does not assume any liability arising out of the application or use of any product described herein; neither does it convey any license under its patent rights, nor the rights of others. The user of products in such applications shall assume all risks of such use and will agree to hold Diodes Incorporated and all the companies whose products are represented on our website, harmless against all damages.

LIFE SUPPORT

Diodes Incorporated products are not authorized for use as critical components in life support devices or systems without the expressed written approval of the President of Diodes Incorporated.

© Diodes Incorporated