SB305G THRU SB3100G

Single Phase 3.0 AMPS. Glass Passivated Bridge Rectifiers

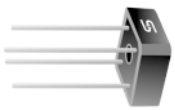

Voltage Range
50 to 1000 Volts
Current
3.0 Amperes

Features

- ✧ UL Recognized File # E-96005
- ✧ Glass passivated junction
- ✧ Surge overload rating 60 amperes peak
- ✧ Low forward voltage drop
- ✧ High temperature soldering guaranteed: 250°C / 10 seconds / 0.375" (9.5mm) lead length at 5 lbs. (2.3 Kg) tension
- ✧ Small size, simple installation
- ✧ Leads solderable per MIL-STD-202, Method 208

SB-3

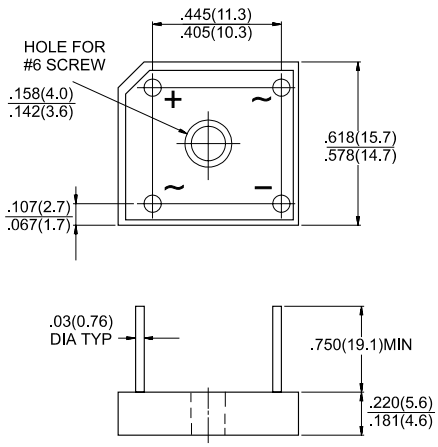

Dimensions in inches and (millimeters)

Maximum Ratings and Electrical Characteristics

Rating at 25°C ambient temperature unless otherwise specified.
Single phase, half wave, 60 Hz, resistive or inductive load.
For capacitive load, derate current by 20%

Type Number	SB 305G	SB 310G	SB 320G	SB 340G	SB 360G	SB 380G	SB 3100G	Units
Maximum Recurrent Peak Reverse Voltage	50	100	200	400	600	800	1000	V
Maximum RMS Voltage	35	70	140	280	420	560	700	V
Maximum DC Blocking Voltage	50	100	200	400	600	800	1000	V
Maximum Average Forward Rectified Current @T_A = 50°C	3.0							A
Peak Forward Surge Current, 8.3 ms Single Half Sine-wave Superimposed on Rated Load (JEDEC method)	60							A
Maximum Instantaneous Forward Voltage @ 1.5A	1.0							V
Maximum DC Reverse Current @ T_A=25°C at Rated DC Blocking Voltage @ T_A=125°C	10 500							uA uA
Operating Temperature Range T_J	-55 to +150							°C
Storage Temperature Range T_{STG}	-55 to +150							°C

RATINGS AND CHARACTERISTIC CURVES (SB305G THRU SB3100G)

FIG.1- MAXIMUM NON-REPETITIVE FORWARD SURGE CURRENT PER BRIDGE ELEMENT

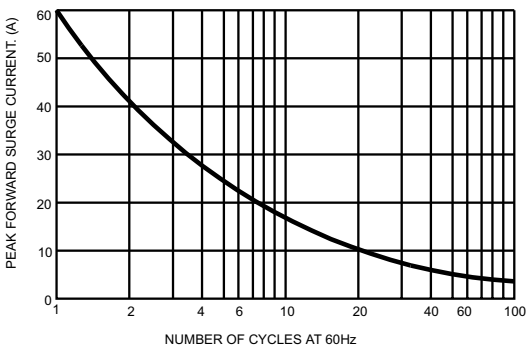

FIG.2- MAXIMUM FORWARD CURRENT DERATING CURVE

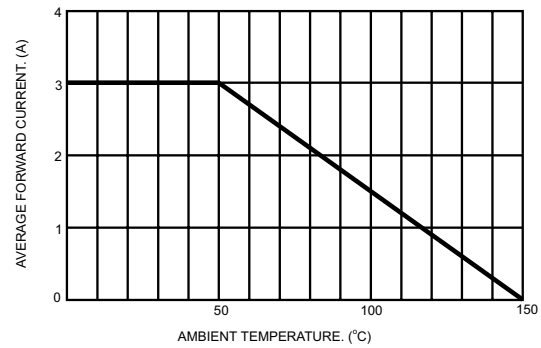

FIG.3- TYPICAL INSTANTANEOUS FORWARD CHARACTERISTICS PER BRIDGE ELEMENT

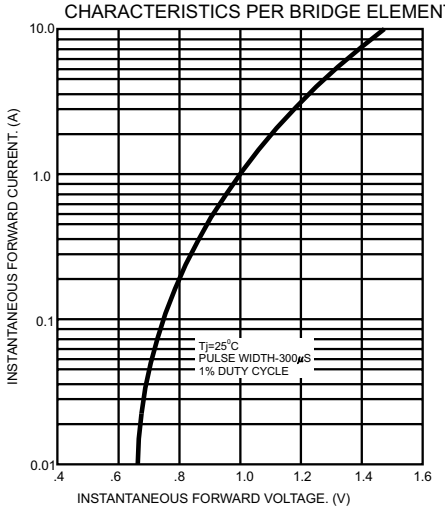

FIG.4- TYPICAL REVERSE CHARACTERISTICS PER BRIDGE ELEMENT

