Film Capacitors – AC Capacitors

Motor run capacitors

Series/Type: **B32356 – MotorCap™ S3 Compact**
Ordering code: **B32356**

Date: 01.04.2014
Version: 7

© EPCOS AG 2014. Reproduction, publication and dissemination of this publication, enclosures hereto and the information contained therein without EPCOS' prior express consent is prohibited.

Construction

- Metallized polypropylene film
- Plastic can with plastic top
- Dry type resin



Features

- Self-healing properties
- Low dissipation factor
- Highest safety level S3 to IEC 60252-1 2013-08
- High insulation resistance
- Case IP53 protected
- file E 106388, component approval mark, on request
- EN 60335-1 compatible

Applications

- For general sine wave applications, mainly as motor run capacitor

Terminals

- Twin core cable, double insulated, 2 x 0.5 mm^2 minimum, 90 ºC, H05-V2-V2-F as standard.
- Twin core cable UL style on request
- Receptacles on request

Mounting parts (optional)

- Threaded stud at bottom of can (M8, max. torque = 5 Nm)
- Fast fixation for mounting into a hole of Ø 8 mm
- Mounting in any position possible

Technical data and specifications	
Reference standards	IEC 60252-1 2013-08 ; UL 810
Life expectance to IEC 60252 2001	400 V: 30000 h (class A) 450 V: 10000 h (class B)
Safety class according to IEC 60252-1 2013-08	S3
UL 810 file E 106388	Approved component,10000 AFC protected up to 450 V (Approval mark upon request)
Rated capacitance C_R	See table ordering codes, page 5
Tolerance	±5%
Permitted capacitance ΔC/C	≤3%
Rated voltage V_R	450 V AC
Rated frequency f_R	50/60 Hz

Maximum ratings	
Maximum permissible voltage V_{max}	1.1 · V_R (V_R = rated voltage)
Maximum permissible current I_{max}	1.3 I_R (I_R = rated current)
Test data	
AC test voltage terminal to terminal U_{TT}	2 V_R, 2 s (routine test) 2 V_R, 60 s (type test)
AC test voltage terminals to can U_{TC}	2 kV AC, 2 s (routine test) 2 kV AC, 60 s (type test)
Insulation resistance R_{ins} or time constant τ at 20 °C, Rel. humidity max. value 85%, annual means ≤ 65%	3000 s
Dissipation factor tan δ at 20 °C	≤1.0 ·10^{-3} (120 Hz)
Maximum rate of voltage rise dv/dt_{max}	10 V/µs
Climatic data	
Climatic category	25/085/21 to IEC 60068-1
Lower category T_{min}	–25 °C
Upper category T_{max}	+85 °C
Damp heat test t_{test}	21 days
Mechanical and thermal properties	
Ball pressure test to IEC 60309-1 sec. 27.3	20 N at 125 °C
Plastic can and top disk material	UL 94 V2 min/ Compliant to EN60252-1/ EN60335-1
■ Glow wire test to IEC 60695 – 2 – 1 / 1 Test temp 550 ºC for $I_R \leq 0.5$ A Test temp 750 ºC for $I_R \geq 0.5$ A	Self-extinguish within 2 s of withdrawing glow wire without igniting wrapping tissue to GWIT
■ Part compliant to EN 60335-1 Glow wire test acc. to EN60335-1:2002 +A11+A1 +A12+Corr.+A2:2006, IEC60335-1 ed 4+A1+A2	Self extinguish within 2 s with GWT 750 ºC and within 60 s with GWFI 850 ºC of withdrawing the glow wire and without igniting the wrapping tissue
Tracking test to IEC 60112 solution A	>250 V
Compatibility to RoHS	
Compliance to directive 2002/95/EC	RoHS compatible
Approvals	
VDE – 400 V/85 °C: 30000 h (class A)	Approved
VDE – 450 V/85 °C: 10000 h (class B)	Approved
UL 810 E106388	Approved component 10000 AFC, protected up to 450 V

Logistics	
Delivery mode	■ EU pallet as standard ■ Cardboard tape on pallet Pack unit, see dimension table

Dimensional drawings

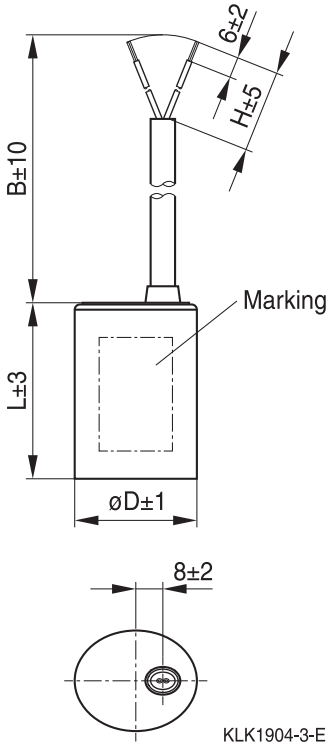

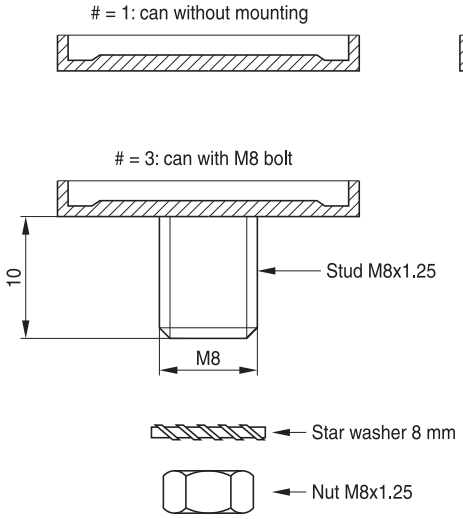

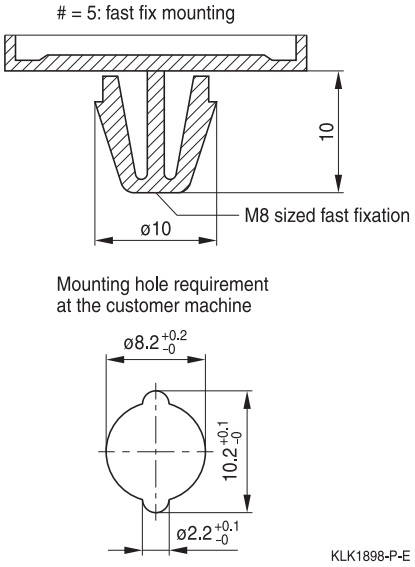

Ordering codes & Packaging units

V_R	C_R	Dimensions D × L	Ordering code	Packing units
V AC	µF	mm		pcs.
400/450	2	25 × 58	B32356B4205J0#x	112
	2.5	25 × 58	B32356B4255J0#x	112
	3	30 × 62	B32356B4305J0#x	112
	3.15	30 × 62	B32356B4315J5#x	112
	4	30 × 62	B32356B4405J0#x	112
	5	35 × 62[1]	B32356B4505J0#x	84
	6	35 × 62	B32356B4605J0#x	84
	6.3	35 × 62	B32356B4635J0#x	84
	7	35 × 62	B32356B4705J0#x	84
	7.5	35 × 71	B32356B4755J0#x	84
	8	35 × 71	B32356B4805J0#x	84
	9	35 × 71	B32356B4905J0#x	84
	10	35 × 71	B32356B4106J0#x	84
	11	40 × 71	B32356B4116J0#x	60
	12	40 × 71	B32356B4126J0#x	60
	12.5	40 × 71	B32356B4126J5#x	60
	14	45 × 71	B32356B4146J0#x	45
	15	45 × 71	B32356B4156J0#x	45
	16	45 × 96	B32356B4166J0#x	45
	17.5	45 × 96	B32356B4176J5#x	45
	18	50 × 96	B32356B4186J0#x	32
	20	50 × 96	B32356B4206J0#x	32

[1] In construction type, with Fast fixation device, the dimension will change to 32 x 62. For Plain can construction and Plastic can with M8 construction the dimension will remain as 35 x 62

Composition of ordering code

#: construction

1	plastic can
3	plastic can with M8 bolt
5	plastic can with fast fixation device, available for diameter 30 mm, 32 mm and 35 mm, others on request

x: cable length (dimension ’B’, “H’ in drawing) upon request.

Display of ordering codes for EPCOS products

The ordering code for one and the same product can be represented differently in data sheets, data books, other publications and the website of EPCOS, or in order-related documents such as shipping notes, order confirmations and product labels. **The varying representations of the ordering codes are due to different processes employed and do not affect the specifications of the respective products**. Detailed information can be found on the Internet under www.epcos.com/orderingcodes

Cautions and warnings

⚠ Please read “Applications warning, installation and maintenance instructions” and the “General Safety Data Sheet for Power Capacitors” issued by ZVEI, which are available on the internet at **www.epcos.com/ac_capacitors**, to ensure optimum performance and to prevent products from failing, and in worst case, bursting and fire. Information given in the data sheet reflects typical specifications. You are kindly requested to approve our product specifications or request our approval for your specification before ordering.

Important notes

The following applies to all products named in this publication:

1. Some parts of this publication contain **statements about the suitability of our products for certain areas of application**. These statements are based on our knowledge of typical requirements that are often placed on our products in the areas of application concerned. We nevertheless expressly point out **that such statements cannot be regarded as binding statements about the suitability of our products for a particular customer application.** As a rule, EPCOS is either unfamiliar with individual customer applications or less familiar with them than the customers themselves. For these reasons, it is always ultimately incumbent on the customer to check and decide whether an EPCOS product with the properties described in the product specification is suitable for use in a particular customer application.
2. We also point out that **in individual cases, a malfunction of electronic components or failure before the end of their usual service life cannot be completely ruled out in the current state of the art, even if they are operated as specified.** In customer applications requiring a very high level of operational safety and especially in customer applications in which the malfunction or failure of an electronic component could endanger human life or health (e.g. in accident prevention or life-saving systems), it must therefore be ensured by means of suitable design of the customer application or other action taken by the customer (e.g. installation of protective circuitry or redundancy) that no injury or damage is sustained by third parties in the event of malfunction or failure of an electronic component.
3. **The warnings, cautions and product-specific notes must be observed.**
4. In order to satisfy certain technical requirements, **some of the products described in this publication may contain substances subject to restrictions in certain jurisdictions (e.g. because they are classed as hazardous)**. Useful information on this will be found in our Material Data Sheets on the Internet (www.epcos.com/material). Should you have any more detailed questions, please contact our sales offices.
5. We constantly strive to improve our products. Consequently, **the products described in this publication may change from time to time**. The same is true of the corresponding product specifications. Please check therefore to what extent product descriptions and specifications contained in this publication are still applicable before or when you place an order. We also **reserve the right to discontinue production and delivery of products**. Consequently, we cannot guarantee that all products named in this publication will always be available. The aforementioned does not apply in the case of individual agreements deviating from the foregoing for customer-specific products.
6. Unless otherwise agreed in individual contracts, **all orders are subject to the current version of the "General Terms of Delivery for Products and Services in the Electrical Industry" published by the German Electrical and Electronics Industry Association (ZVEI)**.
7. The trade names EPCOS, BAOKE, Alu-X, CeraDiode, CeraLink, CeraPlas, CSMP, CSSP, CTVS, DeltaCap, DigiSiMic, DSSP, FilterCap, FormFit, MiniBlue, MiniCell, MKD, MKK, MLSC, MotorCap, PCC, PhaseCap, PhaseCube, PhaseMod, PhiCap, SIFERRIT, SIFI, SIKOREL, SilverCap, SIMDAD, SiMic, SIMID, SineFormer, SIOV, SIP5D, SIP5K, ThermoFuse, WindCap are **trademarks registered or pending** in Europe and in other countries. Further information will be found on the Internet at www.epcos.com/trademarks.