SHEET 1 OF 1

▲ LED SPECS	UNITS	RED	GREEN
FORWARD CURRENT	mA	20	20
FORWARD VOLTAGE @20mA	V	2.0-2.5	2.1-2.5
LUMINOUS INTENSITY @ 20mA	mcd	400	60

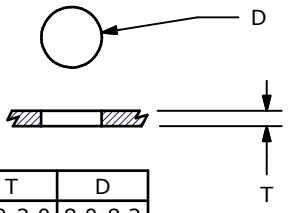

T	D
1.0-2.0	8.0-8.2
2.0-2.5	8.2-8.4
2.5-3.0	8.4-8.6

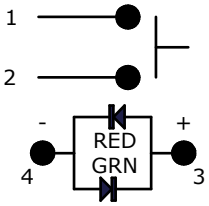

▲ CIRCUIT: SPST
OFF (ON)

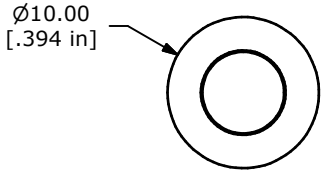

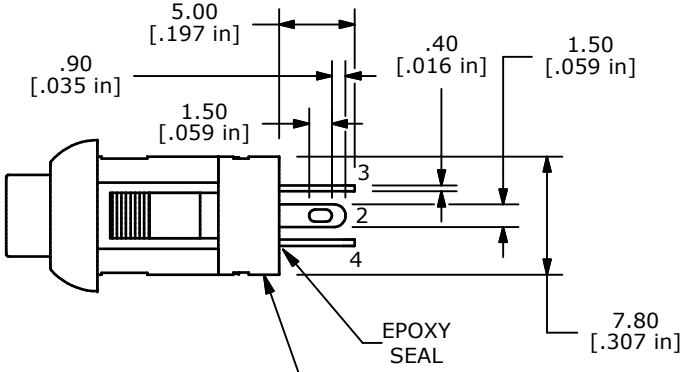

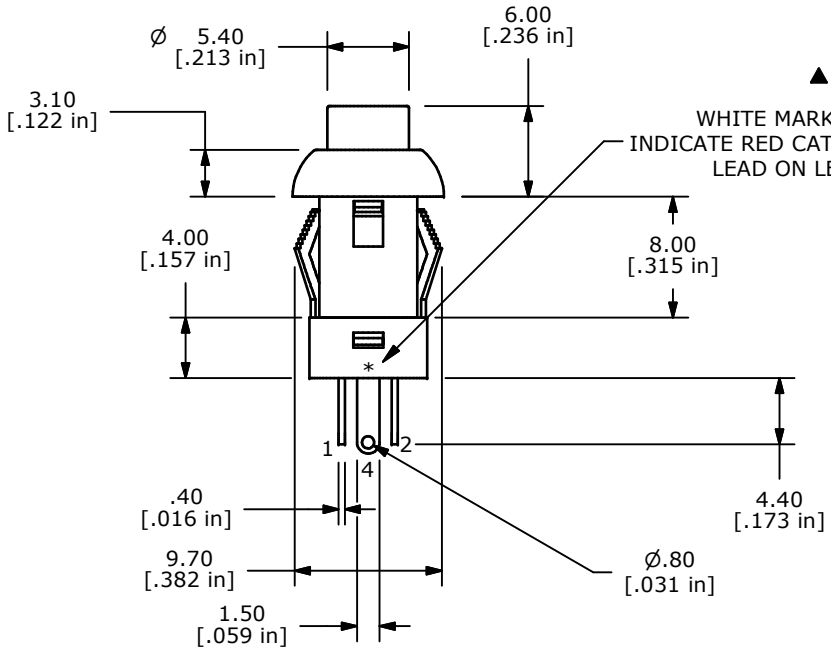

▲ WHITE MARK TO INDICATE RED CATHODE (-) LEAD ON LED

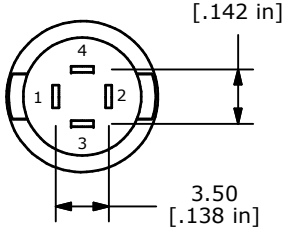

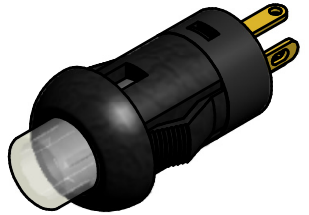

ISOMETRIC

NOTES:
1. ALL DIMENSIONS IN MM [INCH]
2. GENERAL TOLERANCE: X.X=±0.4
   X.XX=±0.25
3. RATING: 30VDC @ 100mA
4. CONTACT RESISTANCE: 50 Milli-OHMS MAX.
5. INSULATION RESISTANCE: 100Mega-OHMS MIN@500VDC.
6. OPERATING FORCE: 250 ± 100gf
7. TRAVEL: 1.8± 0.3mm
8. OPERATING TEMPURATURE: -40˚C TO 85˚C
9. OPERATING LIFE: 50,000 CYCLES
▲ 10. LED: RED (FORWARD), GREEN (REVERSE)
11. ▲ DENOTES CRITICAL PARAMETERS
12. 2002/95/EC (ROHS) COMPLIANT

REV	PCR NO	DESCRIPTION	DATE	BY
A	21073	NEW RELEASE	3/19/13	EBP

THE INFORMATION CONTAINED IN THIS DOCUMENT IS PROPRIETARY TO E-SWITCH AND IS NOT TO BE COPIED OR TRANSFERRED

E•SWITCH®

TITLE LP1OA1ARG

SCALE	DATE	DR	DWG	REV
	3/19/2013	EBP	B200205	A