DSK Diode Semiconductor Korea

Schottky Barrier Diode **B0520LW/B0530W/B0540W**

FEATURES

- Low forward voltage drop.
- Guard ring construction for transient Protection.
- High conductance.

Pb Lead-free

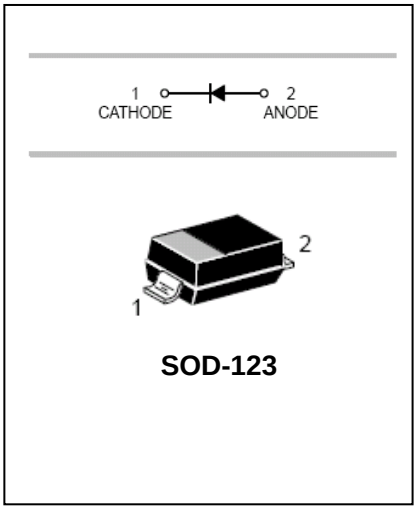

SOD-123

APPLICATIONS

- 0.5A surface mount schottky barrier rectifier.

ORDERING INFORMATION

Type No.	Marking	Package Code
B0520LW	SD	SOD-123
B0530W	SE	SOD-123
B0540W	SF	SOD-123

MAXIMUM RATING @ Ta=25℃ unless otherwise specified

Characteristic	**Symbol**	**B0520LW**	**B0530W**	**B0540W**	**Unit**
Peak Repetitive Reverse Voltage Working Peak Reverse Voltage DC Reverse Voltage	V_{RRM} V_{RWM} V_R	20	30	40	V
RMS Reverse Voltage	$V_{R(RMS)}$	14	21	28	V
Average Rectified Output Current @ T_L = 100℃	I_O	0.5			A
Non-Repetitive Peak Forward Surge Current 8.3ms single half sine-wave superimposed on rated load	I_{FSM}	5.5			A
Power Dissipation	P_d	410			mW
Typical Thermal Resistance Junction to Ambient	$R_{\theta jA}$	244			℃/W
Operating and Storage Temperature Range	T_j,T_{stg}	-65 to +125			℃
Voltage Rate of Change	dv/dt	1000			V/μs

Schottky Barrier Diode **B0520LW/B0530W/B0540W**

ELECTRICAL CHARACTERISTICS @ Ta=25℃ unless otherwise specified

Characteristic	Symbol	B0520LW	B0530W	B0540W	Unit	Test Conditions
Minimum Reverse Breakdown Voltage	$V_{(BR)R}$	20 - -	- 30 -	- - 40	V	I_R= 250μA I_R= 130μA I_R= 20μA
Maximum Forward Voltage Drop	V_{FM}	0.300 0.385 - 0.220 0.330 -	0.375 0.430 - - - -	- 0.510 0.620 - 0.460 0.610	V	I_F=0.1A, T_j =25℃ I_F=0.5A, T_j =25℃ I_F=1.0A, T_j =25℃ I_F=0.1A, T_j =100℃ I_F=0.5A, T_j =100℃ I_F=1.0A, T_j =100℃
Maximum Leakage Current	I_{RM}	75 - 250 - -	- 20 - 130 -	- - 10 - 20	μA	V_R=10V,T_j=25℃ V_R=15V,T_j=25℃ V_R=20V,T_j=25℃ V_R=30V,T_j=25℃ V_R=40V,T_j=25℃
		5.0 8.0 -	- -	- 5.0 13	mA	V_R=10V,T_j=100℃ V_R=20V,T_j=100℃ V_R=40V,T_j=100℃
Junction Capacitance	C_J	170			pF	f=1MHz,V_R=0V DC

TYPICAL CHARACTERISTICS @ Ta=25℃ unless otherwise specified

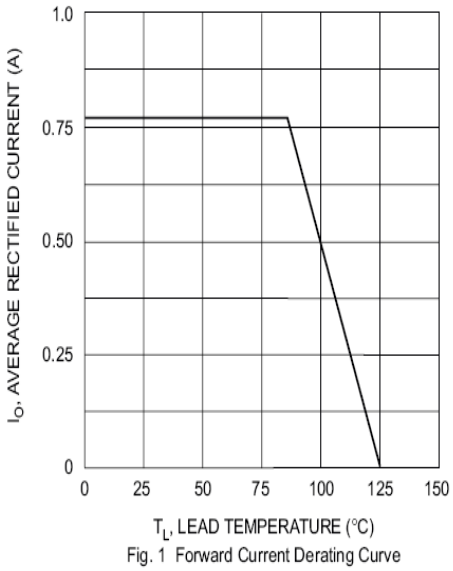

Fig. 1 Forward Current Derating Curve

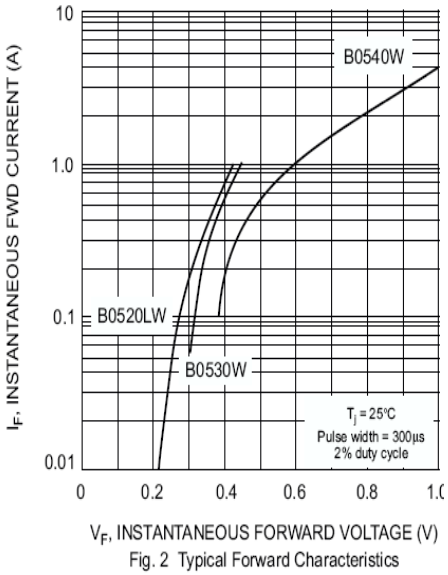

Fig. 2 Typical Forward Characteristics

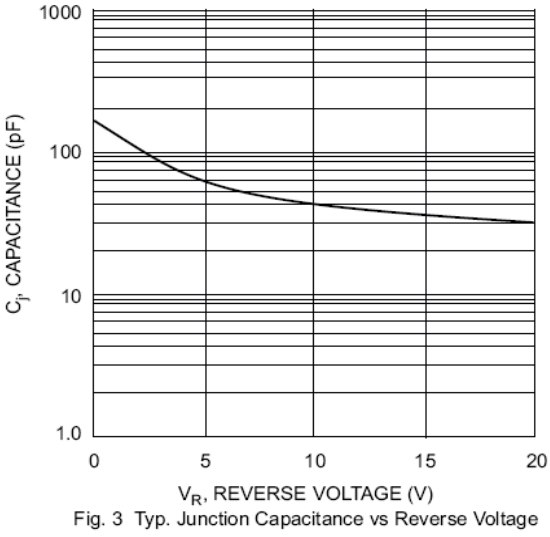

Fig. 3 Typ. Junction Capacitance vs Reverse Voltage

Diode Semiconductor Korea

Schottky Barrier Diode **B0520LW/B0530W/B0540W**

PACKAGE OUTLINE

Plastic surface mounted package SOD-123

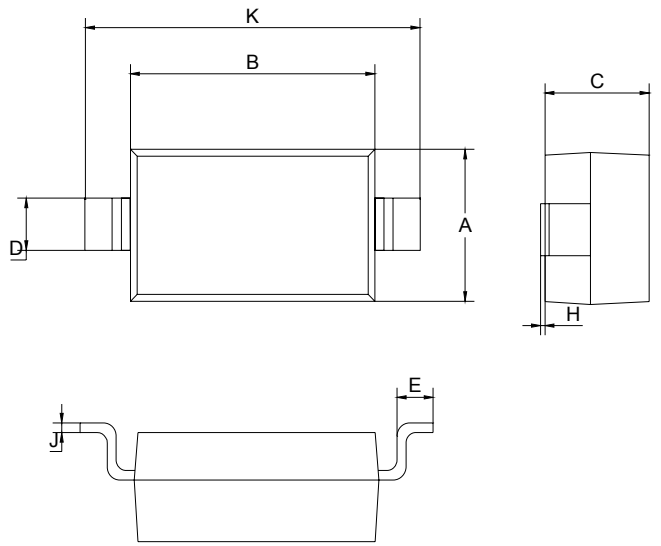

SOD-123		
Dim	Min	Max
A	1.4	1.8
B	2.55	2.85
C	1.15 Typical	
D	0.5	0.6
E	0.3	0.4
H	0.02	0.10
J	0.1 Typical	
K	3.55	3.85
All Dimensions in mm		

SOLDERING FOOTPRINT

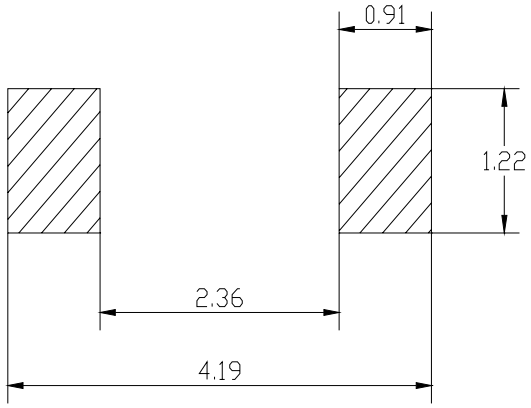

Unit :mm

PACKAGE INFORMATION

Device	Package	Shipping
B0520LW/B0530W/B0540W	SOD-123	3000/Tape&Reel